QUANTUM®

OUTBACK

OWNER'S MANUAL

QUANTUM®

PROVIDING GREATER INDEPENDENCE

WARNING!

A Quantum Rehab Provider or a qualified technician must perform the initial setup of this power chair and must perform all of the procedures in this manual.

The symbols below are used throughout this owner's manual and on the power chair to identify warnings and important information. It is very important for you to read them and understand them completely.

WARNING!

Indicates a potentially hazardous condition/situation. Failure to follow designated procedures can cause either personal injury, component damage, or malfunction. On the product, this icon is represented as a black symbol on a yellow triangle with a black border.

MANDATORY!

These actions should be performed as specified. Failure to perform mandatory actions can cause personal injury and/or equipment damage. On the product, this icon is represented as a white symbol on a blue dot with a white border.

PROHIBITED!

These actions are prohibited. These actions should not be performed at any time or in any circumstances. Performing a prohibited action can cause personal injury and/or equipment damage. On the product, this icon is represented as a black symbol with a red circle and red slash.

WARNING!

Avoid abrupt maneuvers at excessive speed. It is recommended that ou operate the vehicle at the slowest speed until you become familiar with vehicle controls and operation.

Intended Use

The intended use of this Pride Mobility Products device is to provide mobility assistance to persons with mobility impairment who have the capacity to operate a motorized mobility power chair in an indoor/outdoor environment.

Regarding Devices for Prescription Use

Our mobility products and their components are available for sale either as retail ("over-the-counter") or with a prescription. When prescribed, the following statement is applicable.

WARNING!

CAUTION! Federal law restricts this device to sale by or on the order of a physician or other certified personnel licensed by the law of the State (US only) or region in which this personnel practices to use or order the use of the device.

NOTE: This owner's manual is compiled from the latest specifications and product information available at the time of publication. We reserve the right to make changes as they become necessary. Any changes to our products may cause slight variations between the illustrations and explanations in this manual and the product you have purchased. The latest/current version of this manual is available on our website.

NOTE: This product is compliant with WEEE, RoHS, and REACH directives and requirements.

NOTE: This product meets IPX4 classification (IEC 60529).

NOTE: This product and its components are not made with natural rubber latex. Consult with the manufacturer regarding any after-market accessories.

Quick Reference Information

Quantum Rehab Provider: _____

Address: _____

Phone Number: _____

Purchase Date: _____

ACN 088 609 661 CH REP

Copyright © 2024
INFMANU5430/Rev A/June 2024

Table of Contents

Introduction 5

Safety 6

Your Power Chair 7

Assembly 11

Comfort Adjustments 14

Batteries and Charging 18

Care and Maintenance 21

ADVISORY STATEMENT REGARDING CERTAIN COMPONENTRY INCORPORATED BY THIRD-PARTY MANUFACTURERS INTO FINISHED POWER CHAIRS: When Quantum Rehab power bases, seating systems, or other components are incorporated into a finished power chair manufactured or assembled by any third party, that third party is responsible to assure the safety, functionality, and legal compliance of the finished power chair. Quantum Rehab makes no representation concerning the safety, functionality, or legal compliance of the finished power chair or its componentry manufactured by a third party. While Quantum Rehab makes every effort to assure that our components are distributed responsibly, manufacturers, distributors, and consumers are reminded that finished power chairs must comply with a variety of standards and requirements for governmental safety and functionality.

If it is necessary to physically modify a power chair, including the addition of third-party componentry, to accommodate the medical needs of the power chair occupant, a risk assessment in conformance with ISO 14971, as outlined in ISO 7176, should be performed.

Changes to power chairs that are likely to affect conformance and risk evaluation include but are not limited to: moving the securement-point brackets; lowering the back-support height; shortening the seat length; adding secondary postural supports that are not firmly attached to the power chair; adding components that have sharp edges (i.e., edges with less than 0.08 in. [2 mm] radius); or any change that compromises the structural integrity of the power chair frame.

Language Usage

This owner's manual is intended for distribution in all English-speaking countries where our Power Chairs are sold. We have chosen to compose this manual using language and spellings common to the USA. Since we recognize that not all English-speaking countries use the same words or spellings, please refer to the following chart for some common word variations that may be encountered throughout this manual.

USA	Variation
asphalt	tarmac
authorized	authorised
backward(s)	rearward(s)
caster	castor
center	centre
color	colour
cord	lead
counterclockwise	anticlockwise
curb	kerb
elevator	lift
labor	labour
meter	metre
path	bridleway; footpath
pocketbook	handbag
provider	dealer; agent
sidewalk	pavement
tire	tyre
trunk	boot
turn signal	turn indicator
wrench	spanner
yard	grounds

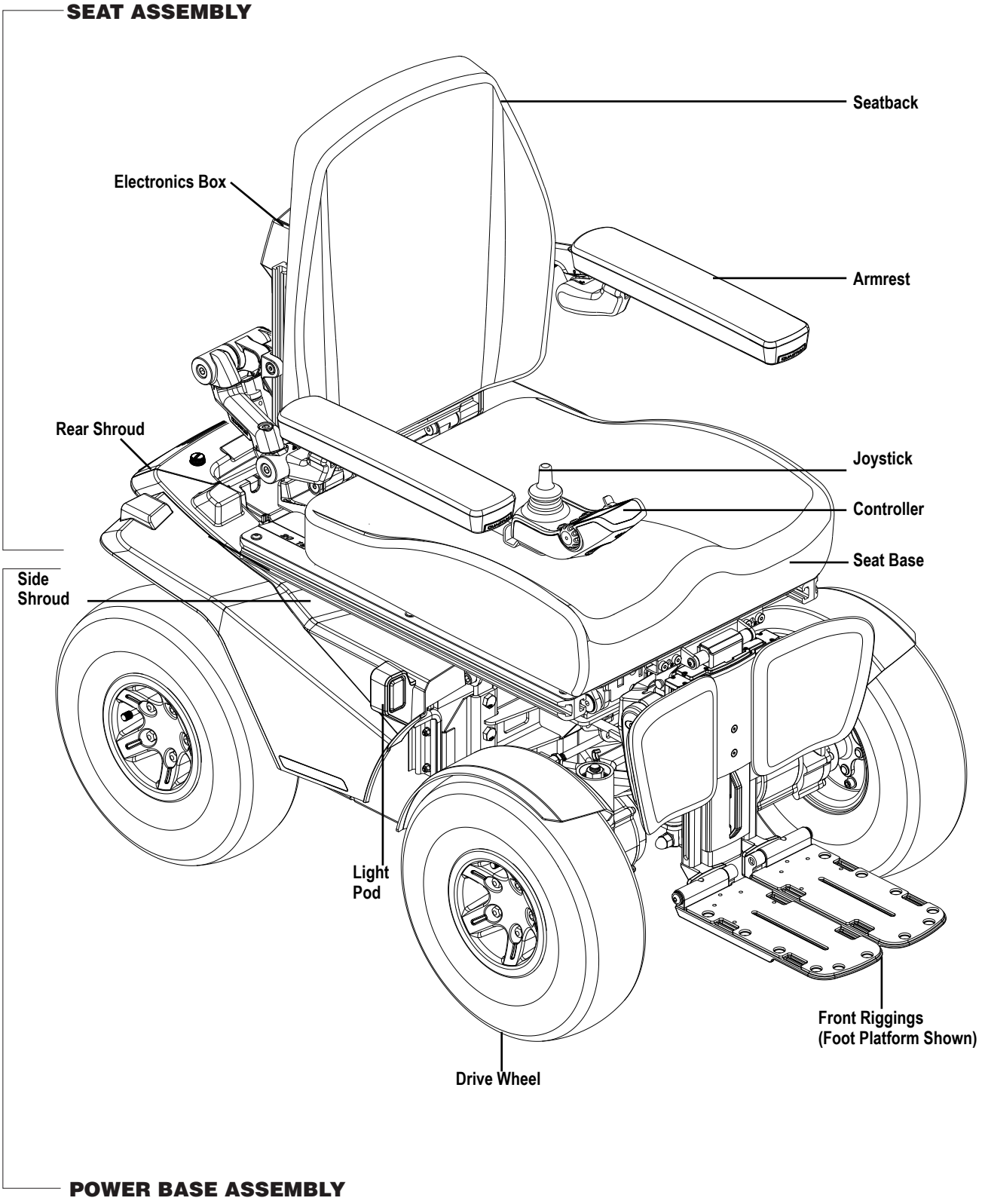
SEAT ASSEMBLY
Seatback
Electronics Box
Armrest
Rear Shroud
Joystick
Controller
Seat Base
Side
Shroud
Light
Pod
Front Riggings
(Foot Platform Shown)
Drive Wheel
POWER BASE ASSEMBLY

Safety

WELCOME to Quantum Rehab. The power chair you have purchased combines state-of-the-art components with **safety**, comfort, and styling in mind. We are confident that these design features will provide you with the conveniences you expect during your daily activities. Once you understand how to **safely** operate and care for your power chair, it should give you years of trouble-free operation and service.

Read and **follow** all instructions, warnings, and notes in this manual before attempting to operate your power chair for the first time. You must also read all instructions, warnings, and notes contained in any supplemental instructional booklets for the controller, front riggings, and/or seating system that accompanied your power chair before initial operation. Your **safety** depends upon you, as well as your provider, caretaker, or healthcare professional in using good judgment.

If there is any information in this manual which you do not understand, or if you require additional assistance for setup or operation, please contact your Quantum Rehab Provider. **Failure to follow the instructions in this manual and those located on your power chair can lead to personal injury and/or damage to the power chair, including voiding the warranty.**

Purchaser's Agreement

By accepting delivery of this product, you promise that you will not change, alter, or modify this product or remove or render inoperable or unsafe any guards, shields, or other safety features of this product; fail, refuse, or neglect to install any retrofit kits from time to time provided by Quantum to enhance or preserve the safe use of this product.

Shipping and Delivery

Before using your power chair, make sure your delivery is complete as some components may be individually packaged. If you do not receive a complete delivery, please contact your Quantum Rehab Provider immediately. Where damage has occurred during transport, either to the packaging or content, please contact the delivery company responsible.

NOTE: If you ever lose or misplace your copy of this manual, contact us and we will be glad to send you a new one immediately.

Product Safety Symbols

The symbols below are used on the power chair to identify warnings, mandatory actions, and prohibited actions. It is very important for you to read and understand them completely.

NOTE: There are more warnings identified and explained in the Consumer Safety Guide that is included with your power chair. Please become familiar with all the warnings and safety information found in the Consumer Safety Guide and refer to this resource often.

Read and follow the information in the owner's manual.

Locked and in drive mode.

Place unit on level ground and stand to one side when changing from drive mode to freewheel mode or freewheel mode to drive mode.

Unlocked and in freewheel mode.

OR

Indicates UNOCCUPIED power chair securement points.

Indicates power chair with similar label is not rated for occupied transit.

Class II Equipment

OR

Manufactured in

Power Chair information label

Crush hazard! Keep hands clear.

General Guidelines

MANDATORY!

Do not operate your new power chair for the first time without completely reading and understanding this owner's manual.

Your power chair is a state-of-the-art life-enhancement device designed to increase mobility. We provide an extensive variety of products to best fit the individual needs of the power chair user. Please be aware that the final selection and purchasing decision regarding the type of power chair to be used is the responsibility of the power chair user, who is capable of making such a decision, and his/her healthcare professional (i.e., medical doctor, physical therapist, etc.).

The contents of this manual are based on the expectation that a mobility device expert has properly fitted the power chair to the user and has assisted the prescribing healthcare professional and/or the Quantum Rehab Provider in the instruction process for the use of the product.

There are certain situations, including some medical conditions, where the power chair user will need to practice operating the power chair in the presence of a trained attendant. A trained attendant can be defined as a family member or care professional specially trained in assisting a power chair user in various daily living activities.

As you begin using your power chair during daily activities, you will probably encounter situations in which you will need some practice. Simply take your time and you will soon be in full and confident control as you maneuver through doorways, on and off of elevators, up and down ramps, and over moderate terrain.

Below are some precautions, tips, and other safety considerations that will help you become accustomed to operating your power chair safely.

Pre-Ride Safety Check

Get to know the feel of your power chair and its capabilities. We recommend that you perform a safety check before each use to make sure your power chair operates smoothly and safely.

Perform the following inspections prior to using your power chair:

- Check for proper tire inflation. Maintain but do not exceed the psi/bar/kPa air pressure rating indicated on each tire with pneumatic tires.
- Check all electrical connections. Make sure they are tight and not corroded.
- Check all controller connections to the power base. Make sure they are secured properly.
- Check the brakes. See “Care and Maintenance.”
- Check battery charge. See “Batteries and Charging.”
- Ensure the manual freewheel levers are in drive mode before sitting on the power chair.

NOTE: If you discover a problem, contact your Quantum Rehab Provider for assistance.

⚠ WARNING!

We recommend that a DOT-approved safety helmet be worn at all times when operating your motorized power chair. As with any type of vehicle, it is the responsibility of the user to contribute to his/ her own safety by adhering to applicable federal, state, and local laws, as well as laws set forth specifi cally for operation of vehicles. Failure to do so may result in personal injury.

Your can be safely operated on uneven and unpacked terrain when the user follows all safety guidelines and is wearing a safety helmet approved by the DOT (US) or the governing body in other geographic areas. Be sure to familiarize yourself with and obey all safety helmet standards in your geographic area. The U.S. Department of Transportation (DOT) requires that DOT-approved helmets sold in the United States meet Federal Motor Vehicle Safety Standard (FMVSS) 218. Follow all DOT-approved helmet manufacturer's instructions for fit, use, and care of your helmet. Failure to wear a helmet and/or follow all safety guidelines may result in personal injury, death and/or property damage.

Use extreme caution when riding on wet and/or oily surfaces, sand, gravel, riverbeds, mud, snow, rocks, leaves, other natural or man-made terrain, and/or sloped terrain. There is an increased risk of loss of control, which can result in injury, death, and/or property damage

Avoid driving into and/or through water. Failure to electrical components may occur. Improper use of your vehicle under these conditions could void your warranty. Failure to heed and/or follow all safety guidelines may result in personal injury, death and/or property damage.

During operation of this power chair, users should follow all safety guidelines contained or referenced in this manual and all other supplemental materials, exercise caution and comply with all applicable federal state and local laws relating to operation of a motorized power chair. Whenever operating this power chair at or near maximum speed or on uneven or unpacked terrain, assure that the pathway is clear of obstructions and other hazards and wear a Department of Transportation approved safety helmet complying with FMVSS 218 to diminish the risk of head injury. Failure to heed these directives may result in property damage, personal injury or death.

⚠ WARNING!

The following can adversely affect steering and stability while operating your vehicle:

- **Holding onto or attaching a leash to walk your pet.**
- **Carrying passengers (including pets).**
- **Hanging any articles from the rear or sides of the power wheelchair**
- **Being pushed by another motorized vehicle.**
- **Towing any type of object.**

Your Power Chair

Your power chair has two main assemblies: the seat assembly and the power base assembly. Typically, the seat assembly includes the armrests, seatback, and seat base. The power base assembly includes four motors/two brake assemblies on rear motors, four drive wheels, two batteries, and wiring harnesses. **See (page 4) and figure 1.**

Electrical Components

The electrical components consist of the controller assembly, the batteries, and the motors. The batteries, motors, and controller power module (if equipped) are located on the power base assembly. The controller is located on the seat assembly. Connectivity between the controller and the motors, batteries, and the battery charger is provided by one or more wiring harnesses. **See figure 1.**

Controller Harness Connector: The controller harness connector is where the controller plugs into the power base. Each controller uses a different type of harness. Regardless of which type of controller is used, the harness must be secured to the seat assembly and not allowed to drag on the floor.

Motor Connectors: This is where the controller connects to the motors.

Battery Connector: This is where the controller connects to the batteries.

Controller Power Module: This enables the controller to communicate with the batteries and the motors.

Main Circuit Breaker (located on the front of the battery box): The main circuit breaker is a safety feature built into your power chair. When the batteries and the motors are heavily strained (e.g., from excessive loads), the main circuit breaker trips to prevent damage to the motors and the electronics. If the circuit trips, allow your power chair to “rest” for approximately one minute. Next, flip the paddle on the circuit breaker to reset the system. Turn on the controller, and continue normal operation. If the main circuit breaker continues to trip repeatedly, contact your Quantum Rehab Provider. The circuit breaker also functions as a battery isolation switch. The batteries can be isolated from the system by pushing the yellow button. When power for the system is required simply flip the paddle on the circuit breaker down to restore power.

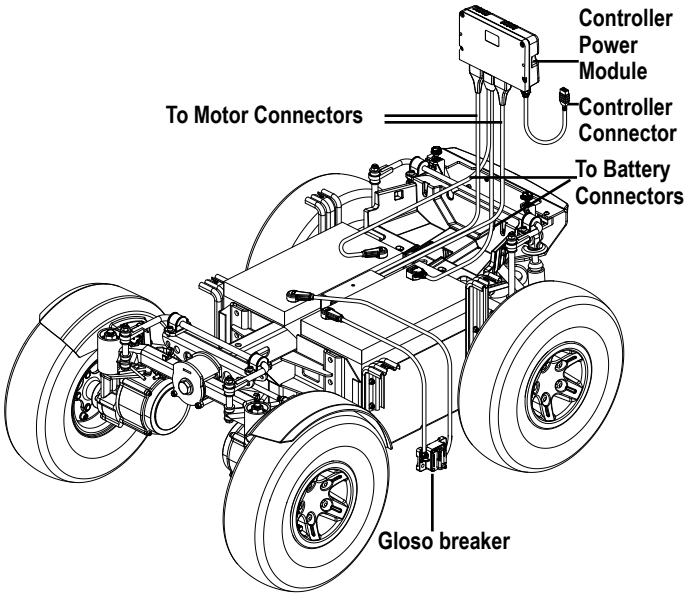

Figure 1. Electrical Components

Manual Freewheel Levers

For your convenience, your power chair is equipped with a manual freewheel lever mounted on two of the rear motors. The levers allow you to disengage the drive motors and maneuver the chair manually.

WARNING!

Do not use the power chair while the drive motors are disengaged! Do not disengage the drive motors when the power chair is on an incline, as the unit could roll on its own! Only engage the freewheel mode when on a level surface.

WARNING!

It is important to remember that when your power chair is in freewheel mode, the braking system is disengaged.

To operate the manual freewheel levers:

1. Push down both manual freewheel levers for freewheel mode (drive motor disengaged). **See figure 2.**
2. Pull up both manual freewheel levers for drive mode (drive motor engaged). **See figure 2.**

MANDATORY!

You must turn off the power before disengaging the drive motors; otherwise, you may get an error code on the controller. To clear this code, turn off the controller and place the power chair in drive mode. Then, turn on the controller. The error message should be cleared. If it is not, contact your Quantum Rehab Provider.

NOTE: The power chair will be significantly easier to push with the power off.

WARNING!

Avoid applying excessive force to the manual freewheel levers.

Do not use your foot to operate the manual freewheel levers. Do not stand on the manual freewheel levers. Applying excessive force to the manual freewheel levers may result in damage to the freewheel levers, motors, and brakes.

Do not use the freewheel lever handles as tie-down points to secure this product.

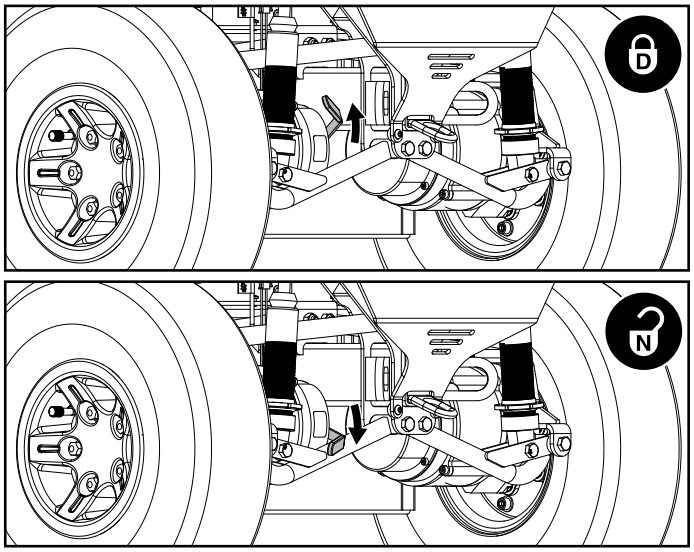

Figure 2. Manual Freewheel Lever Operation

WARNING!

The center of gravity of your power chair was factory set to a position that meets the needs of the demographic majority of users. Your Quantum Rehab Provider has evaluated your power chair and made any necessary adjustments to suit your specific requirements. Do not change your seating configuration without first contacting Quantum Rehab or your Quantum Rehab Provider.

Some power chair components are heavy. You may need assistance to lift or carry them. Please refer to the specifications table for specific component weights before you disassemble the power chair.

Remove the occupant from the power chair before making any adjustments.

LED LIghts

Your power chair may be equipped with LED lights. The lights are composed of three white LEDs in the front and three red LEDs in the rear. **See figure 3.**

The LED lights operate through a joystick.

NOTE: If your power chair is equipped with LED Lights, these lights may also operate as indicator and hazard lights.

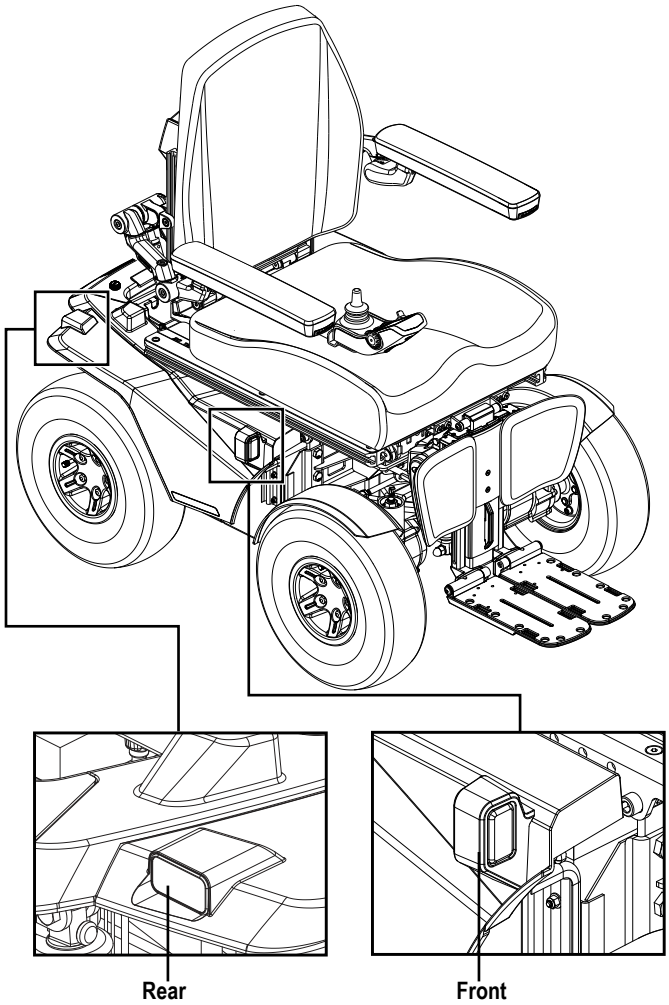

Figure 3. LED Lights

Initial Assembly

Your power chair may require some assembly either before initial use or after transportation. It may also require disassembly to make some comfort adjustments. **Figure 5** details those parts of the power chair that are designed to be disassembled and assembled by an end user or by a qualified caregiver before using the product or making comfort adjustments.

NOTE: Any nylon insert lock nut removed during the disassembly or adjustment of the power chair must be replaced with a new nut. Nylon insert lock nuts should not be reused as it may cause damage to the nylon insert, resulting in a less secure fit. Replacement nylon insert lock nuts are available at local hardware stores or through your Quantum Rehab Provider.

⚠ WARNING!

Do not pick up the seat frame by the armrests. They are free to pivot, and you may lose control of the seat if they do so.

MANDATORY!

Prevent controller harness damage! Avoid routing the controller harness on the outside of the armrest pad. Route the harness under the armrest or toward the inside of the armrest pad. Use correct tie-down points for controller harness to prevent the harness from getting caught in the drive wheels, pinched in the seat frame, or damaged when passing through doorways.

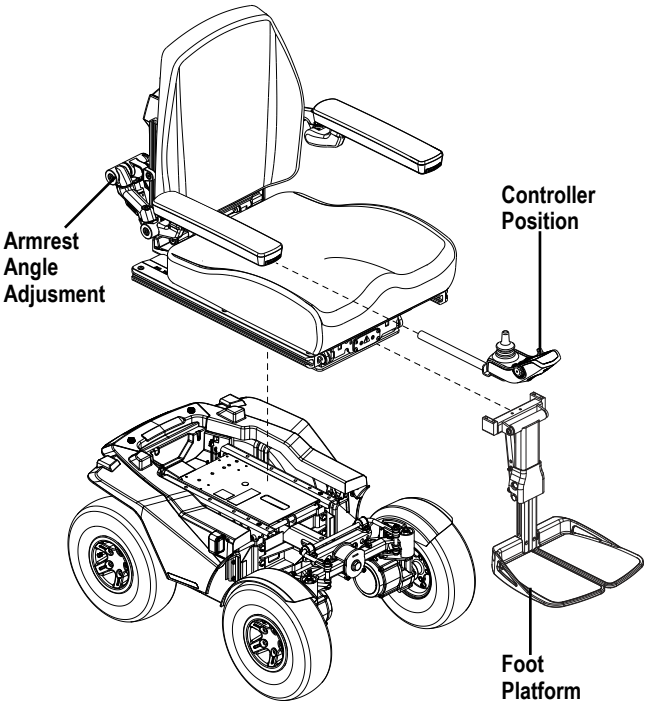

Figure 4. Assembly View

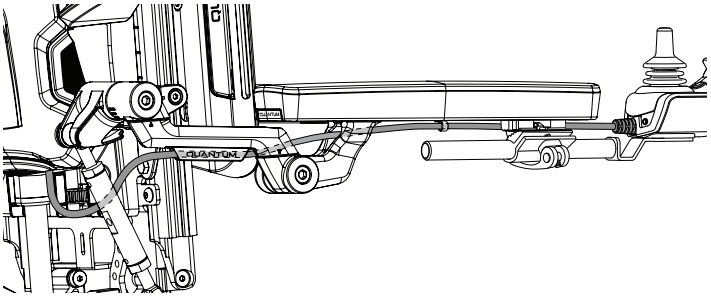

Figure 5. Controller Harness Routing on a TRU-Balance® 4

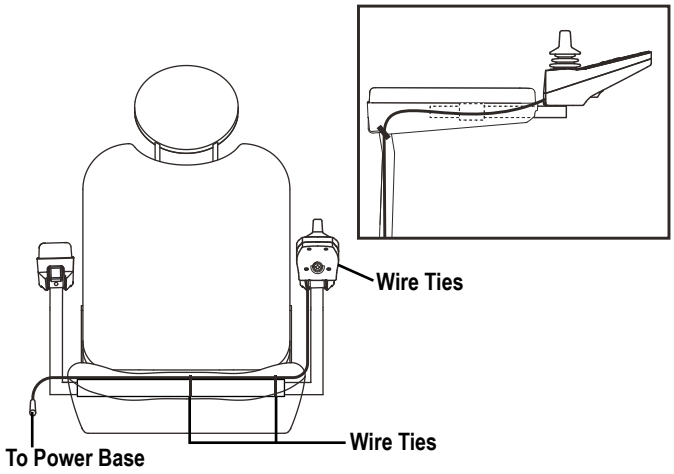

Figure 6. Controller Harness Routing on a Contour Seat

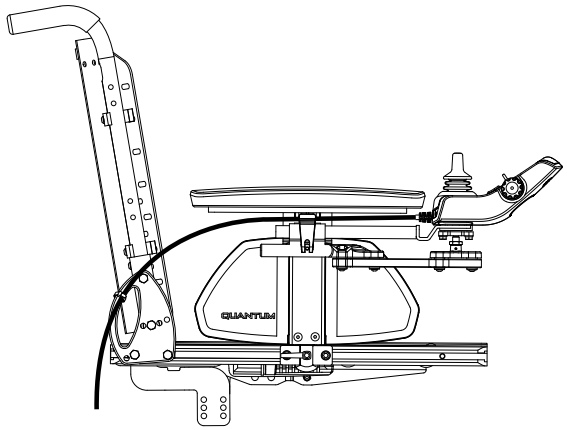

Figure 7. Controller Harness Routing on a TB-Flex Seat

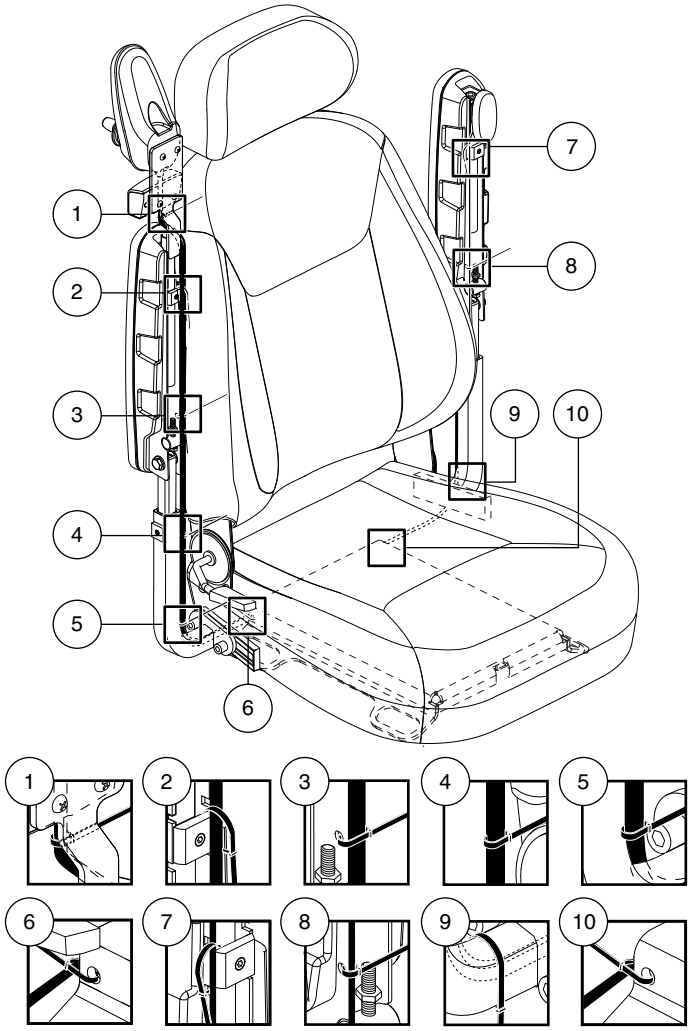

Figure 8. Controller Harness Routing on a Captain's Seat

Power Chair Securement Points

The power chair is equipped with three (3) tie-down points for the purpose of securing the unoccupied power chair during motor vehicle transport. Each tie-down is clearly labeled for this purpose.

To secure a power chair equipped with tie-down points:

- Always secure the power chair in a forward-facing position in the vehicle.
- Attach the four (4) tie-down straps to only designated, labeled transit securement points indicated by anchor symbols on the power chair. **See figures 11 and 12.** Tighten the straps sufficiently to remove all slack.
- Never attach tie-downs to adjustable, moving, or removable parts of the power chair such as armrests, front riggings, and wheels.
- Position the anchor point for the rear tie-down straps directly behind the rear securement points on the power chair. The front tie-down straps should be anchored to floor points that are spaced wider than the power chair to provide increased stability. **See figure 12.**

MANDATORY!

The power chair should be used as indicated in the manufacturer's instructions. If you have any questions about the proper use of your power chair, contact your Quantum Rehab Provider.

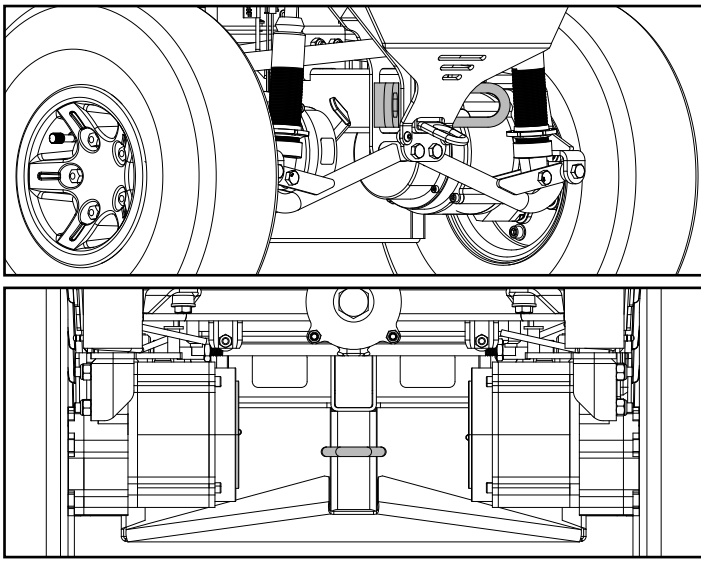

Figure 9. Unoccupied Transit System Securement Points

Comfort Adjustments

After becoming familiar with your power chair's operation, you may find the need to make some adjustments to increase your comfort, such as seat height and angle, armrest width, angle and height, and controller position.

NOTE: If your power chair is equipped with a TRU Balance 3 Power Positioning System, refer to the seat adjustment information contained in separate manuals. If your power chair is equipped with a contoured seating system, refer to the following information.

⚠ WARNING!

The center of gravity of your power chair was factory set to a position that meets the needs of the demographic majority of users. Your Quantum Rehab Provider has evaluated your power chair and made any necessary adjustments to suit your specific requirements. Do not change your seating configuration without first contacting Quantum Rehab or your Quantum Rehab Provider.

Some power chair components are heavy. You may need assistance to lift or carry them. Please refer to the specifications table for specific component weights before you disassemble the power chair.

Remove the occupant from the power chair before making any adjustments.

You may need the following to make comfort adjustments:

- metric/standard socket set and ratchet
- adjustable wrench
- metric/standard hex key set
- thread lock

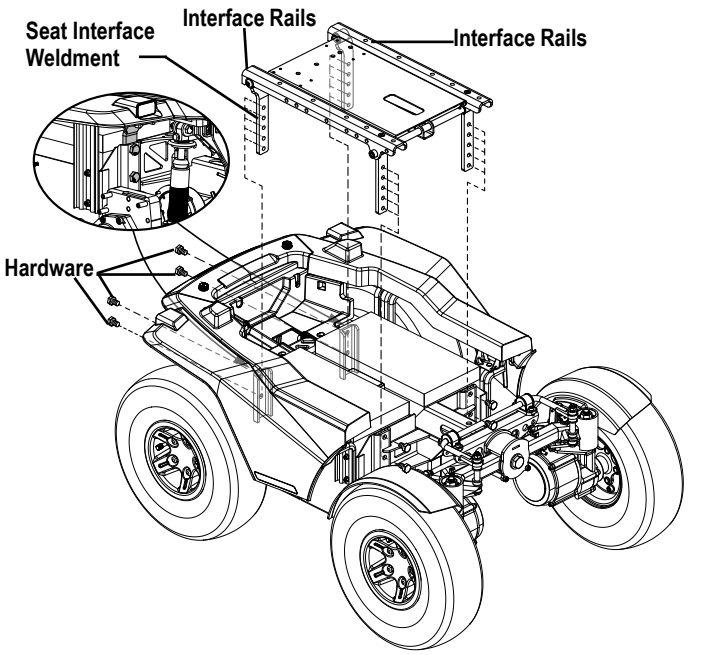

Figure 10. Seat Height/Angle Adjustment

Armrest Width Adjustment
You can change each armrest's width independently of the other.

NOTE: Changing the armrest width may increase the overall width of your power chair.

To change the armrest width:
1. Locate the two armrest knobs on each side of the armrest receiver bracket. **See figure 11.**
2. Loosen the knobs.
3. Slide the armrests in or out to the desired width.
4. Tighten the knobs.

Armrest Angle Adjustment
To change the armrest angle:
1. Lift the armrest straight up so that it is perpendicular to the floor. **See figure 11.**
2. Loosen the jam nut.
3. Turn the adjusting screw to raise or lower the front of the armrest.
4. Tighten the jam nut to lock the adjusting screw into place.

Armrest Height Adjustment
To change the armrest height:
1. Loosen the two setscrews located on the armrest receiver.
2. Raise or lower the armrest to the desired height.
3. Tighten the setscrews to secure the armrest.

Controller Position
You can move the controller in toward or out away from the armrest, or change the position of the controller for either left-hand or right-hand use.

⚠ WARNING!

Do not place the controller harness so that it can be pinched in the seat frame or the power base frame.

To extend the controller:
1. Flip up the armrest so it is perpendicular to the floor.
2. Loosen the setscrew on the controller bracket. **See figure 11.**
3. Slide the controller into or out of the armrest to the desired position.
4. Tighten the setscrew to secure the controller.

To change the controller position:
1. Turn off the power to the controller.
2. Unplug the controller connector(s) from the power base.
3. Remove any wire ties securing the controller harness to the armrest.
4. Flip up the armrest so it is perpendicular to the floor.
5. Loosen the setscrew on the controller bracket.
6. Slide the controller out of the armrest.
7. Loosen the setscrew in the other armrest.

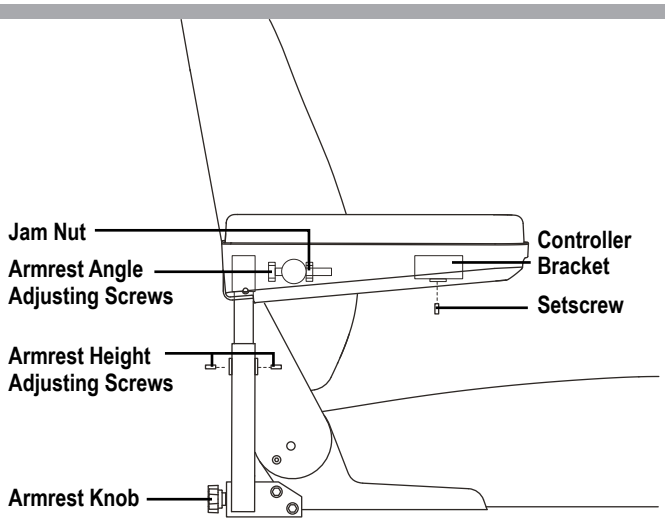

Figure 11. Seatback/Armrest Adjustment

8. Place the controller in the other armrest.
9. Tighten the setscrews in both armrests.
10. Route the controller harness to the back of the power base and plug in the controller.
11. Secure the controller harness to the armrest with wire ties. **See figure 6.**

NOTE: If your power chair is equipped with a TRU Balance 3 Power Positioning System, refer to the information provided in supplemental manuals provided with your seating system.

Foot Platform Height Adjustment
The foot platform height is easily adjusted to several different heights.

To raise or lower the foot platform:
1. Remove the hardware from the foot platform bracket. **See figure 12.**
2. Raise or lower the foot platform to the desired height.
3. Reinstall the hardware into the foot platform bracket and tighten.

Foot Platform Depth Adjustment
You can adjust the depth of the foot platform.

To adjust the foot platform depth:
1. Remove the hardware from the foot platform bracket. **See figure 12.**
2. Move the foot platform in or out of the desired depth.
3. Reinstall the hardware into the foot platform bracket tighten.

Foot Platform Angle Adjustment
You can adjust the angle of the foot platform.

To adjust the foot platform angle:
1. Flip up the foot platform and locate the screw. S**ee figure 12.**
2. Turn the screw to raise or lower the front of the foot platform.

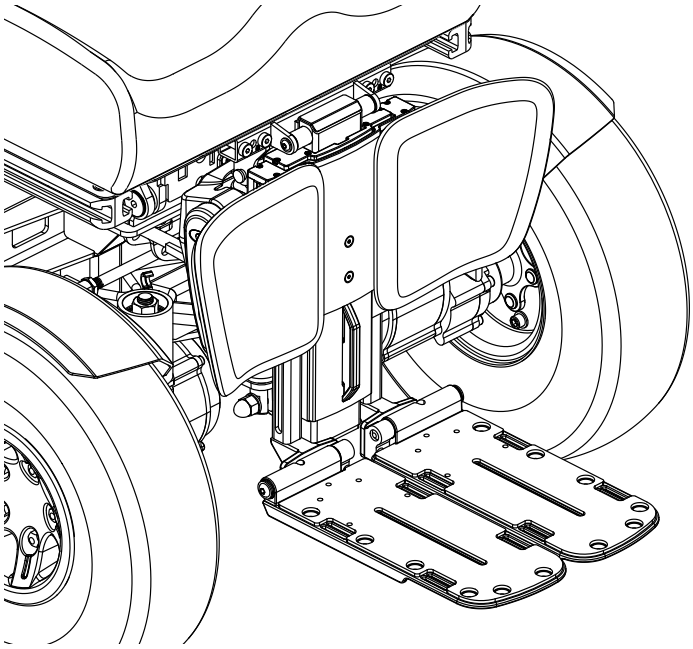

Front View of Foot Platform Adjustment

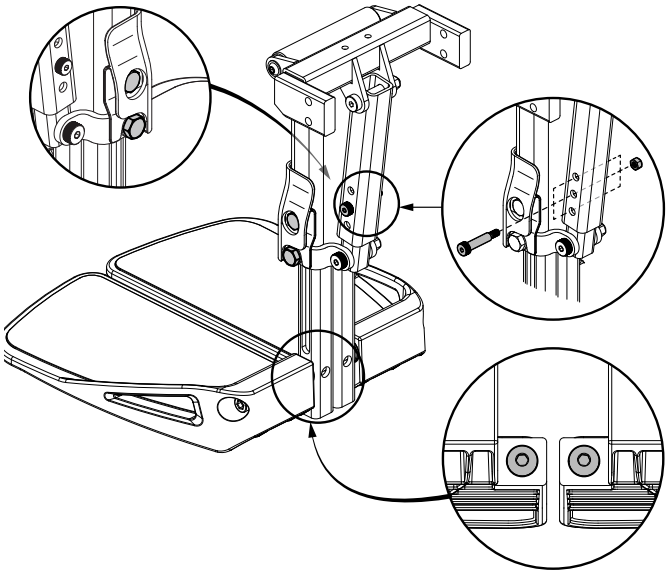

Figure 12. Foot Platform Adjustment

Positioning Belt

Your power chair may be equipped with a positioning belt that can be adjusted for operator comfort. **See figure 13.** The positioning belt is designed to support the operator so that he/she does not slide down or forward in the seat. The positioning belt is not designed for use as a restraining device.

⚠ WARNING!

The positioning belt should be secured at all times. Never allow the positioning belt to hang or drag on the floor as it may become entangled.

To install the positioning belt:

1. Remove the rearmost screw that holds the seat hinge to the seat base on both the left and right seat hinges.
2. Insert the screw through the supplied washer, through the positioning belt and into the seat base for each side of the power chair seat.
3. Tighten both screws.

To adjust the positioning belt for operator comfort:

1. Once seated, insert the metal tab on one side of the belt into the plastic housing on the opposite side until you hear a click. **See figure 13.**
2. Pull the excess strap attached to the metal tab until it is secure, but not so tight as to cause discomfort.

To release the positioning belt:

1. Press the push button mechanism on the plastic housing.

MANDATORY!

Make sure the positioning belt is properly secured to the power chair and is adjusted for operator comfort before each use.

Inspect the positioning belt for loose parts or damage, including tears, worn spots, bent hardware, damaged latch mechanisms, dirt or debris, before each use of the power chair. If you discover a problem, contact your Quantum Rehab Provider for maintenance and repair.

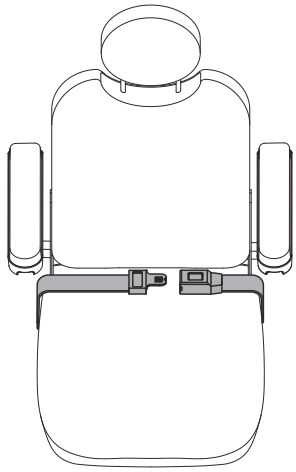

Figure 13. Positioning Belt Adjustment

Batteries and Charging

Your power chair uses two long-lasting, 12-volt, deep-cycle batteries. These batteries are sealed and maintenance free. Since they are sealed, there is no need to check the electrolyte (fluid) level. Deep-cycle batteries are designed to handle a longer and deeper discharge. Though they are similar in appearance to automotive batteries, they are not interchangeable. Automotive batteries are not designed to handle a long, deep discharge, and also are unsafe for use in power chairs.

MANDATORY!

Battery posts, terminals, and related accessories contain lead and lead compounds. Wear goggles and gloves when handling batteries and wash hands after handling.

WARNING!

Contact your Quantum Rehab Provider if you have any questions regarding the batteries in your power chair.

ONLY USE batteries and a battery charger that have been supplied with your power chair, or that have been tested and approved by Quantum for use in your specific model of power chair. Using batteries or a battery charger that have not been tested and approved by Quantum may cause malfunction

PROHIBITED!

Always use two batteries of the exact same type, chemistry, and amp-hour (Ah) capacity.

Charging the Batteries

The battery charger is essential in providing long life for your power chair batteries. It is designed to optimize your power chair's performance by charging the batteries safely, quickly, and easily.

T**o charge the batteries using the off-board charger:**

1. Position your power chair next to a standard electrical outlet.
2. Be certain the controller power is turned off and the power chair is in drive mode.
3. Plug the off-board charger into the off-board charger/ programming socket on the controller. **See figure 14.**
4. Plug the off-board charger into the electrical outlet.
5. When the batteries are fully charged, unplug the off-board charger from the electrical outlet and then from the controller.

WARNING!

The LED lights on the charger indicate different charger conditions at various times: charger power on, charging in progress, and charging complete. If the LED does not indicate that charging is complete within 24 hours, unplug the charger from the outlet and contact your Quantum Rehab Provider. Refer to the manual supplied with the charger for a complete explanation of these indicators.

PROHIBITED! Removal of grounding prong can create electrical hazard. If necessary, properly install an approved 3-ponged adapter to an electrical outlet having 2-pronged plug access.

PROHIBITED! Never use an extension cord to plug in your battery charger. Plug the charger directly into a properly wired standard electrical outlet.

PROHIBITED! Do not allow unsupervised children to play near the power chair while the batteries are charging. Quantum Rehab recommends that you do not charge the batteries while the power chair is occupied.

MANDATORY! Read the battery charging instructions from this manual and in the manual supplied with the battery charger before charging the batteries.

WARNING! Explosive gases may be generated while charging the batteries. Keep the power chair and battery charger away from sources of ignition such as flames or sparks and provide adequate ventilation when charging the batteries.

WARNING! You must recharge the power chair batteries with the supplied off-board battery charger. Do not use an automotive-type battery charger.

WARNING! Inspect the battery charger, wiring, and connectors for damage before use. Contact your Quantum Rehab Provider if damage is found.

WARNING! Do not attempt to open the battery charger case. If the battery charger does not appear to be working correctly, contact your Quantum Rehab Provider.

WARNING! Be aware that the battery charger case may become hot during charging. Avoid skin contract and do not place on surfaces that may be affected by heat.

WARNING! If the battery charger is equipped with cooling slots, then do not attempt to insert objects through these slots.

WARNING! If the battery charger has not been tested and approved for outdoor use, then do not expose it to adverse or extreme weather conditions. If the battery charger is exposed to adverse or extreme weather conditions, then it must be allowed to adjust to the difference in environmental conditions before use indoors. Refer to the manual supplied with the battery charger for more information.

⚠ WARNING!

The battery charger may have indicator lights that illuminate under certain conditions. Refer to the operating instructions supplied with the charger for a complete explanation of these indicators.

Q-Logic 3 Battery Charging Indicator
If your battery charger is connected to the controller but not the electrical outlet, the Q-Logic 3 controller system will display a warning to indicate the system is not charging. **See figure 15.**

To clear this error when it occurs:
1. If the system is turned off with the charger plugged into the controller, unplug the charger from the controller.
2. If the system is powered on, unplug the charger from the controller then turn the system off and back on.

Charger indication warning:
When your powerchair is plugged in to charge, your controller will indicate charging and drive inhibit by scrolling your battery indicator continuously (indication determined by electronics of your power chair).

NOTE: Your power chair may have accessories or seat function operation that utilize the charging circuit of the power module for functionality and/or drive inhibit. If you notice that your battery indicators are scrolling and the drive is inhibited, but the charger is not plugged into the controller then check your seating position or call your authorized Quantum provider.

Battery Break-in
To break in new batteries for maximum efficiency:
1. Fully recharge any new battery prior to its initial use. This brings the battery up to about 90% of its peak performance level.
2. Operate your power chair throughout the house and yard. Move slowly at first, and do not travel too far until you become accustomed to the controls and break in the batteries.
3. Give the batteries another full charge of at least 8 to 14 hours and operate your power chair again. The batteries will now perform at over 90% of their potential.
4. After four or five charging cycles, the batteries will top off at 100% charge and last for an extended period.

Frequently Asked Questions (FAQs)

How does the charger work?
The battery charger takes the standard electrical outlet voltage (alternating current) and converts it to 24V DC (direct current). The power chair batteries use direct current to run your power chair. When the battery voltage is low, the charger works harder to charge the battery. As the battery voltage approaches full charge, the charger does not work as hard to complete the charging cycle. When the battery is fully charged, the amperage from the charger is nearly at zero. This is how the charger maintains a charge but does not overcharge the battery.

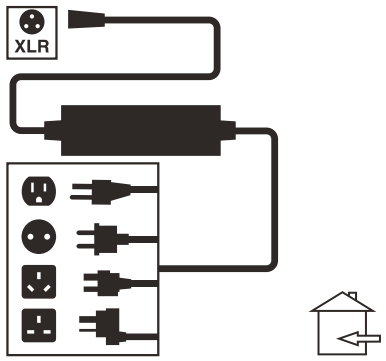

Figure 14. Battery Charger

Figure 15. Q-Logic 3 Battery Charging Indicator

Can I use a different battery charger?
You should use the charger supplied with the power chair. It is the safest, most efficient tool to charge the batteries. We do not recommend using other types of chargers (e.g., an automotive battery charger).

NOTE: Your power chair's charger will not operate after the batteries have been discharged to nearly zero voltage. If this happens, call your Quantum Rehab Provider for assistance.

How often must I charge the batteries?
Many factors come into play when deciding how often to charge the batteries. You may use your power chair all day on a daily basis or you may not use it for weeks at a time.

- **Daily Use**
  If you use your power chair on a daily basis, charge the batteries as soon as you are finished using your power chair. Your power chair will be ready each morning to give you a full day's service. It is recommended that you charge the batteries at least 8 to 14 hours after daily use. We recommend that you charge the batteries for an additional 4 hours after the battery charger indicates that charging is complete.

- **Infrequent Use**
  If you use your power chair infrequently (once a week or less), you should charge the batteries at least once per week for at least 24 hours.

NOTE: Keep your batteries fully charged and avoid deeply discharging your batteries. Refer to the manual supplied with the battery charger for charging instructions. We recommend charging your batteries for at least 48 continuous hours once per month to improve battery performance and battery life.

How can I get maximum range or distance per charge?
Rarely do you have an ideal driving situation such as smooth, flat, hard terrain with no wind, hills, or curves. More often you are presented with hills, sidewalk cracks, uneven and loosely packed surfaces, curves, and wind. All of these factors will affect the distance or running time per battery charge. Below are a few suggestions for obtaining the maximum range per charge:

- Always charge the batteries fully prior to your trip.
- Plan your trip in advance to avoid inclines if possible.
- Limit baggage weight to essential items.
- Try to maintain an even speed and avoid stop-and-go driving.
- We recommend charging your batteries for at least 48 continuous hours once per month to improve battery performance and battery life.

What type of batteries should I use?
We recommend deep-cycle batteries that are sealed and maintenance free. Both AGM and Gel-Cell are deep-cycle batteries that are similar in performance. Refer to the specifications table for more information regarding the batteries used with your power chair.

WARNING!

Corrosive chemicals contained in batteries. Use only AGM or Gel-Cell batteries to reduce the risk of leakage or explosive conditions.

Why do my new batteries seem weak?
Deep-cycle batteries employ a much different chemical technology than that used in car batteries, nickel-cadmium (nicads), or in other common battery types. Deep-cycle batteries are specifically designed to provide power, drain down their charge, and then accept a relatively quick recharge. AGM and Gel-Cell batteries should be charged as often as possible. They do not have a “memory” like nickel-cadmium batteries.

We work closely with our battery manufacturer to provide a battery that best suits your power chair’s specific demands. Fresh batteries arrive regularly at Quantum and are promptly shipped with a full charge. During shipping, the batteries encounter temperature extremes that may influence initial performance. Heat robs the charge from the battery, and cold slows the power available and extends the time needed to recharge the battery (just as with a car battery).

It might take a few days for the temperature of the battery to stabilize and adjust to its new ambient temperature. More importantly, it will take a few “charging cycles” (a partial drain—then a full recharge) to establish the critical chemical balance that is essential to the battery’s peak performance and long life. It will be well worth it to take the time to break in your battery properly.

How can I ensure maximum battery life?
A fully charged deep-cycle battery will provide reliable performance and extended battery life. Keep your power chair’s batteries fully charged whenever possible. Batteries that are regularly and deeply discharged, infrequently charged, or stored without a full charge may be permanently damaged, causing unreliable power chair operation and limited battery life.

NOTE: The useful life of a battery is quite often a reflection of the care it receives.

How should I store my power chair and its batteries?
If you do not use your power chair regularly, we recommend maintaining battery vitality by charging the batteries at least once per week.

If you do not plan on using your power chair for an extended period, fully charge the batteries prior to storage. Disconnect the battery harnesses and store the power chair in a warm, dry environment. Avoid temperature extremes, such as freezing and excessively hot conditions, and never attempt to charge a frozen battery. A cold or frozen battery should be warmed for several days prior to recharging.

What about public transportation?
AGM and Gel-Cell batteries are designed for application in power chairs and other mobility vehicles. These batteries meet Federal Aviation Administration (FAA) requirements (United States only), allowing safe transportation on aircraft, buses, and trains, as there is no danger of spillage or leakage. We suggest you contact the carrier’s ticket counter in advance to determine that carrier’s specific requirements.

What about shipping?
If you wish to use a freight company to ship your power chair to your final destination, repack your power chair in the original shipping container and ship the batteries in separate boxes.

Care and Maintenance

Your power chair is a sophisticated power chair. Like any motorized vehicle, it requires routine maintenance checks. You can perform some of these checks, but others require assistance from your Quantum Rehab Provider. Preventive maintenance is very important. If you follow the maintenance checks in this section as scheduled, you can help ensure that your power chair gives you years of trouble-free operation. If you have any doubt as to your power chair's care or operation, contact your Quantum Rehab Provider.

⚠ WARNING!

Do not service the power chair when the seat is occupied.

Your power chair, like most electrical equipment, is susceptible to damage from the elements. Avoid damp areas of any kind.

⚠ WARNING!

Direct or prolonged exposure to water or dampness could cause the power chair to malfunction electronically and mechanically. Water can cause electrical components to corrode and the chair's frame to rust. Power chairs should be examined periodically for signs of corrosion caused by water exposure, bodily fluid exposure, or incontinence. Damaged components should be replaced or treated immediately.

Should your power chair come in contact with water:

1. Dry your power chair as thoroughly as possible with a towel.
2. Allow your power chair to sit in a warm, dry place for 12 hours to allow unseen water to evaporate.
3. Check the joystick operation and the brakes before using your power chair again.
4. If any inconsistencies are found, take your power chair to a Quantum Rehab Provider. Power chairs that are frequently exposed to sources of water, such as incontinence, should be inspected often for corrosion and electronic components may need to be replaced frequently.

Temperature

- Although your power chair can withstand short-term storage temperatures between -40°F (-40°C) to 149°F (65°C), it is recommended that long-term storage temperatures be between -13°F (-25°C) and 122°F (50°C). Ideal storage conditions are 68°F (20°C) to 70°F (21°C) wherever possible, but we realize that is not always feasible due to different climates and environments.
- In extremely cold temperatures the batteries may freeze. The specific temperature at which they freeze depends on a number of factors, such as battery charge, usage, and composition of the batteries (e.g., AGM or Gel-Cell).

General Guidelines

- Avoid knocking or bumping the controller, especially the joystick.
- Avoid prolonged exposure of your power chair to extreme conditions, such as heat, cold, or moisture.
- Keep the controller clean.
- Check all connectors to ensure that they are all tight and secured properly.
- Make sure pneumatic tires are inflated to the psi/bar/kPa air pressure rating indicated on the tire.

⚠ WARNING!

Make sure your tires are inflated to the psi/bar/kPa air pressure rating indicated on the tire for pneumatic tires. Do not under inflate or over inflate your tires. Low pressure may result in loss of control, and overinflated tires may burst. Overinflating tires can cause them to explode.

Do not use a high pressure hose to inflate your tires.

- Use a rubber conditioner on the tire sidewalls to help preserve them.

⚠ WARNING!

Never use a rubber conditioner on the tread area of the tires; doing so may make the tires slippery and cause your power chair to skid.

- All wheel bearings are prelubricated and sealed. They require no subsequent lubrication.
- If your power chair has a body shroud with a **glossy finish**, the body shroud has been sprayed with a clear sealant coating. You can apply a light coat of car wax to help it retain its high-gloss appearance. If your power chair has a body shroud with a **matte finish**, use ONLY products developed for matte-finish paint. Do not use wax, detail spray, ArmorAll®, or any product made for glossy paint.

⚠ WARNING!

Carefully choose the correct product to protect the finish of your power chair's shroud(s). ONLY products developed for matte-finish paint should be used on shrouds with a matte finish. Failure to follow this warning may result in damage to the shroud's matte paint finish.

- Check all electrical connections. Make sure they are tight and are not corroded. Batteries must sit flat within the battery tray, with the battery terminals facing rearward. Refer to the battery wiring label for the correct wiring layout.

⚠ WARNING!

Even though the power chair has passed the necessary testing requirements for ingress of liquids, you should keep electrical connections away from sources of dampness, including direct exposure to water or bodily fluids and incontinence. Check electrical components frequently for signs of corrosion and replace as necessary.

Daily Checks

- With the controller turned off, check the joystick. Make sure it is not bent or damaged and that it returns to the neutral position when you release it. Check the rubber boot around the base of the joystick for damage. Visually inspect the boot. Do not handle or try to repair it. See your Quantum Rehab Provider if there is a problem.
- Visually inspect the controller harness. Make sure that it is not frayed, cut, or has any wires exposed. See your Quantum Rehab Provider if there is a problem.
- Check for flat spots on solid tires. Flat spots could adversely affect stability.
- Inspect the seating system, armrests, and front riggings for loose hardware, stress points, or damage. See your Quantum Rehab Provider if there is a problem.

Weekly Checks

- Disconnect and inspect the controller from the power base. Look for corrosion. Contact your Quantum Rehab Provider if necessary.
- Ensure that all parts of the controller system are securely fastened to your power chair. Do not overtighten any screws.
- Check for proper tire inflation. Pneumatic tires should be inflated to the psi/bar/kPa air pressure rating indicated on each tire. If a tire does not hold air, see your Quantum Rehab Provider for replacement of the tube.
- Check the brakes. This test should be carried out on a level surface with at least 3 feet (1 meter) of clearance around your power chair.

To check the brakes:

1. Turn on the controller and turn down the speed level of your power chair.
2. After one second, check the battery condition meter. Make sure that it remains on.
3. Slowly push the joystick forward until you hear the electric brakes click. Immediately release the joystick. You must be able to hear each electrical brake operating within a few seconds of joystick movement. Repeat this test three times, pushing the joystick backward, then left, and then right.

Monthly Checks

- Check for drive tire wear. See your Quantum Rehab Provider for repair.
- Check the caster wheels for wear. Replace them as necessary.
- Check the caster forks for damage or fluttering which indicates that they may need to be adjusted or have the bearings replaced. See your Quantum Rehab Provider for repair.
- Check the entire power chair for loose hardware and changes in the function or performance of the power chair. See your Quantum Rehab Provider for service or repair.
- Keep your power chair clean and free of foreign material, such as mud, dirt, hair, food, drink, etc.
- Spring shocks and gas dampers should be visually checked for any abnormality, structure damage, or bent rods. See your Quantum Rehab Provider for repair.

Yearly Checks

Take your power chair to your Quantum Rehab Provider for yearly maintenance, especially if you use your power chair on a daily basis. This helps ensure that your power chair is functioning properly and helps prevent future complications.

Storage

Your power chair should be stored in a dry place, free from temperature extremes. When storing, disconnect the batteries from the power chair. See “Batteries and Charging.”

⚠ WARNING!

If you fail to store the unit properly, the frame can rust and the electronics can be damaged. Any corroded electronic connection should be replaced.

Batteries that are regularly and deeply discharged, infrequently charged, stored in extreme temperatures, or stored without a full charge may be permanently damaged, causing unreliable performance and limited service life. It is recommended that you charge the batteries periodically throughout periods of prolonged storage to ensure proper performance.

You may wish to place several boards under the frame of your power chair to raise it off of the ground during periods of prolonged storage. This takes the weight off the tires and reduces the possibility of flat spots developing on the areas of the tires contacting the ground.

Disposal of Your Power Chair

Your power chair must be disposed of according to applicable local and national statutory regulations. Contact your local waste disposal agency or Quantum Rehab Provider for information on proper disposal of power chair packaging, metal frame components, plastic components, electronics, batteries, neoprene, silicone, and polyurethane materials.

⚠ WARNING!

Plastic bags are a suffocation hazard. Dispose of plastic bags properly and do not allow children to play with them.

Cleaning and Disinfection

Precautions must be taken when cleaning medical equipment/devices to lower the risk of spreading infection. This is to limit the spread of illness and other potentially infection material (OPIM) (blood components).

- Use a damp cloth and mild, non-abrasive cleanser to clean the plastic and metal parts of your power chair. Avoid using products that may scratch the surface of your power chair.
- If necessary, clean your product with an approved disinfectant. Make sure the disinfectant is safe for use on your product before application.

How to Clean/Disinfect Equipment:

Hard/Soft Surfaces (Plastic shrouds, metal framing, seat fabric, tires, armrests and footplate mats, as applicable)

- For hard/soft surfaces, remove visible contamination if present.
  - For plastic and metal use Lysol®/Clorox® disinfecting spray/wipes and other qualified SARS-CoV-2 disinfecting products.
  - For other vinyl surfaces, clean with vinyl safe disinfecting wipes or solutions
    - Suggested Disinfectants
      - Birex® SE Disinfectant, Bleach-Rite® Disinfecting Spray, Citrace® Germicide
      - Dispatch® Spray Hospital Cleaner Disinfectant with Bleach
      - Diluted Bleach Solution (10% dilution or less); Note: Bleach with pH factor between 7 and 9 is suitable; a product with a pH of 10.5 or higher may damage the vinyl surface integrity over an extended period of time.
    - Disinfecting Wipes
      - Clorox, Green Works, PDI Sani-Cloth HB Wipes, Lysol, Oxivir, Virox, and CaviWipes.
  - For Tire cleaning, clean with off the shelf tire /wheel cleaners

Electronics (Joystick controller, enhanced displays, touch screens, remote controls, keyboards, cell phones and tablets, as applicable)

- For electronics, remove visible contamination if present
  - Turn off device and disconnect batteries.
  - Never spray any liquids directly into the product(s).
  - Moisten a microfiber cloth with a mixture of 70% isopropyl alcohol / 30% water solution. The cloth should be damp, but not dripping or excessively wet. Dry surfaces thoroughly to avoid pooling of liquids and prior to boxing.

⚠ WARNING!

Follow all safety instructions for the proper use of the disinfectant and/or cleaning agent before applying it to your product. Failure to comply may result in skin irritation or premature deterioration of upholstery and/or power chair finishes.

WARNING! Never use any cleaning or disinfecting agent, solvent, lubricant, or any other product on the brake pads, brake discs, transaxle, motor/gearbox of your mobility product. Doing so may damage the components and/or cause them not to function properly. Property injury and/or personal injury may result.

Never hose off your power chair or place it in direct contact with water. Your power chair has a painted, ABS plastic body shroud that allows it to be easily wiped clean with a damp cloth.

Never use any chemicals to clean a vinyl seat, as they may cause the seat to become slippery or dry out and crack. Use soapy water and dry the seat thoroughly.

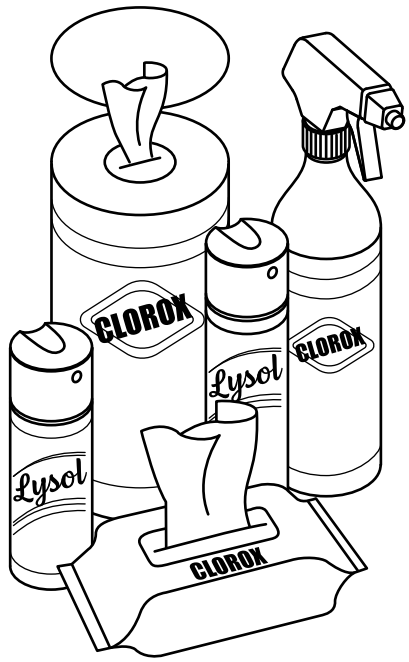

Figure 16. Cleaning and Disinfection

Wheel Replacement

If you have pneumatic tires and you have a flat tire, you can replace the tube. If your chair is equipped with a solid tire insert, then you must replace the entire wheel assembly. Replacement tires, tubes, and wheel assemblies are readily available through your Quantum Rehab Provider.

⚠ WARNING!

The wheels on your power chair should only be serviced or replaced by a Quantum Rehab Provider or a qualified technician.

Be sure that the controller's power is turned off and the power chair is not in freewheel mode before performing this procedure.

When changing a tire, remove only the five lug nuts, then remove the wheel. If any further disassembly is required, deflate the tire completely or it may explode.

Follow these easy steps for a quick and safe repair for both pneumatic and solid tires:

1. Turn off the power to the controller.
2. Set the power chair up on blocks.
3. If you are changing a pneumatic tire, completely deflate it before removing the wheel.
4. Remove the five (5) lug nuts from the wheel hub. **See figure 17.**
5. Pull the wheel off of the hub.
6. Remove the screws and separate the front and rear rim. **See figure 18.**
7. Remove the old tube from the pneumatic tire and replace it with a new tube or replace the entire assembly if it is a solid tire.
8. Screw together the two rim halves.
9. Slide the wheel back onto the hub.
10. Reinstall the five (5) lug nuts onto the wheel hub and tighten.
11. Inflate the pneumatic tire to the psi/bar/kPa air pressure rating indicated on each tire.
12. Remove the power chair from the blocks.

Maintaining correct tire pressure

- Maintaining the right tire pressure will help your power chair's tires maintain top performance.
- Over inflated tires can result in increased wear in your tires along with a more rugged ride.
- Under inflated tires can result in less range and stability along with more punctures in the tire itself.
- Regularly inspect your power chair tires for signs of wear.

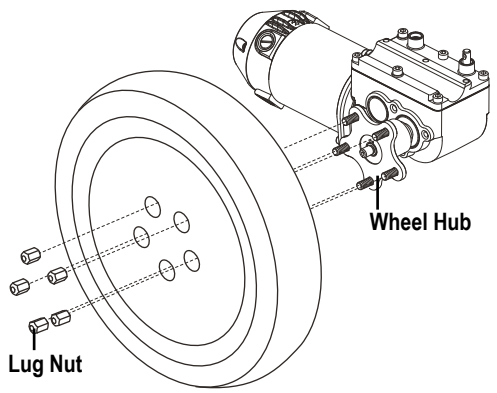

Figure 17. Drive Wheel

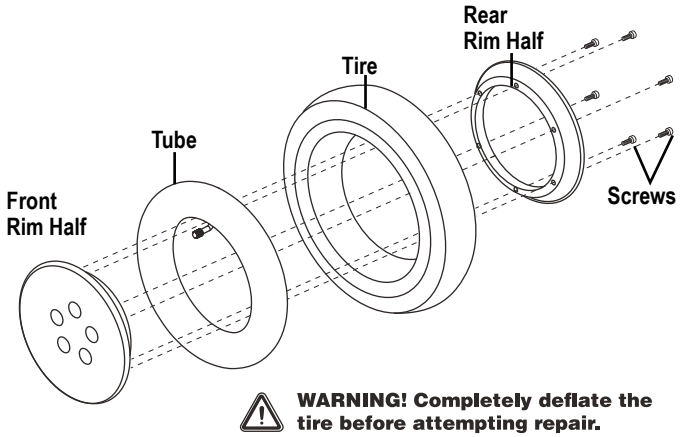

Figure 18. Drive Wheel Disassembled

⚠ WARNING!

It is important that te psi/bar/kPa air pressure rating indicated on each tire be maintained in pneumatic tires at all times. Do not underinflate or overinflate you tires. Low pressure may result in loss of control, and overinflated tires may burst. Failure to maintain the psi/bar/kPa air pressure rating indicated on the tires at all times may result in tire and/or wheel failure.

Do not use a high pressure hose to inflate the power chair drive tires. Inflate the tires from a regulated, low pressure air source with an available pressure gauge. Inflating your tires from a high pressure or unregulated air source could overinflate them, resulting in a burst tire or personal injury.

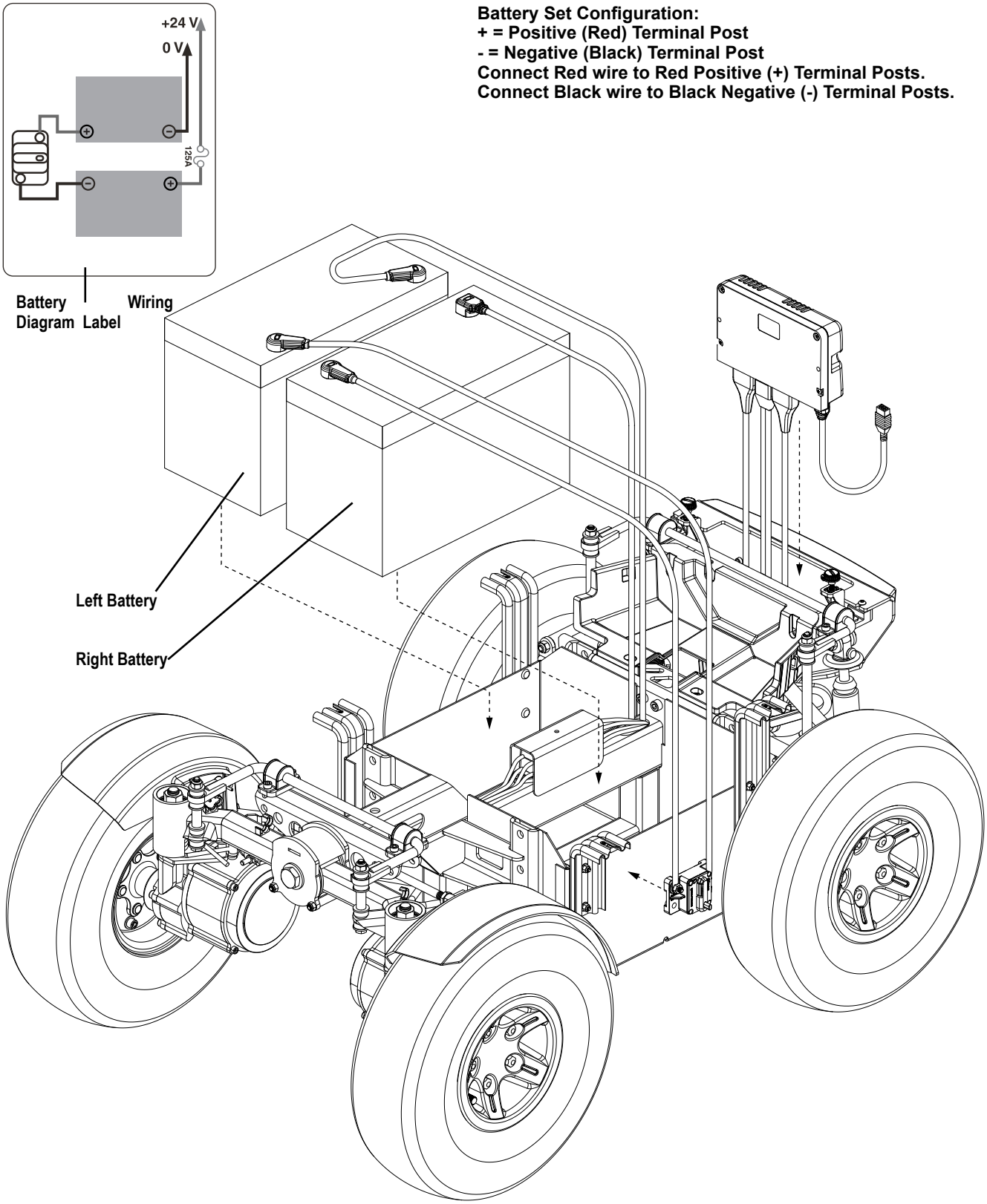

Figure 19. Battery Installation

Battery Replacement
A battery wiring diagram is printed on a decal located on the front cover. See the specification table for correct battery specifications.

MANDATORY!

Battery posts, terminals, and related accessories contain lead and lead compounds. Wear goggles and gloves when handling batteries and wash hands after handling.

WARNING!

The batteries in your power chair should only be serviced or replaced by a Quantum Rehab Provider or a qualified technician.

Do not replace batteries when seat is occupied.

Power chair batteries are heavy. See specifications table. If you are unable to lift that much weight, be sure to get help. Use proper lifting techniques and avoid lifting beyond your capacity.

Do not mix old and new batteries. Always replace both batteries at the same time.

Remove any rear mounted accessories prior to changing the batteries.

PROHIBITED!

Keep tools and other metal objects away from the battery terminals. Contact with tools can cause electrical shock.

NOTE: The batteries must be replaced by an authorized Quantum Rehab Technician.

To replace the batteries:
1. Turn off the power to the controller.
2. Make sure that the power chair is in drive mode. See “Your Power Chair.””
3. Remove the rear plastic shroud by using black knobs.
4. Loosen the 8 mm hardware underneath the side plastics and place the side plastics on the rear drive tires.
5. Removing the batteries may affect the center of gravity on the unit. This change in center of gravity may cause the power chair to flip backwards. Quantum Rehab recommends placing a heavy object behind the power wheelchair.
6. Remove and set aside the two (2) 8 mm socket heads located in the front of the seating and below the seat the interface
7. Gently lift the front of the seat until the prop assembly is no longer bent. Make sure that there is no inference between the seat back and rear of the power wheelchair. If there you will need to adjust the center of gravity of the seating system forward. Be sure to confirm that the spring clip is engaged.
8. Disconnect the battery harness from each battery. Be sure to pay attention to the orientation of the batteries. The new batteries must be placed in the exact orientation.
9. Install the new batteries and connect the quick release battery connectors.
10. Remove the batteries.
11. Connect the battery harness to the new front battery according to the battery wiring diagram.
12. Once the batteries are replaced. While gently lifting up on the seat base push down on the spring clip while depressing the 2 upper buttons.
13. Carefully guide the seat frame down and replace the two 8 mm socket heads.
14. Re-install the rear and side plastics

WARNING!

Make sure you tighten the fasteners so that the connnections are secure.

When to See Your Quantum Rehab Provider for Service
The following symptoms could indicate a serious problem with your power chair. If necessary, contact your Quantum Rehab Provider. When calling, have the model number, serial number, nature of the problem, and the error code if available.
- Motor noise
- Frayed harnesses
- Cracked or broken connectors
- Uneven wear on any of the tires
- Jerky motion
- Pulling to one side
- Bent or broken wheel assemblies
- Does not power up
- Powers up, but does not move
- Loose seat or seating components

Corrective Maintenance
If the battery condition meter does not light up when you turn on the power:
- Check the harness connections. Make sure they are tight.
- Check the circuit breaker. Reset it if necessary.
- Check the battery connections.

QUANTUM® OUTBACK

USA
401 York Avenue
Duryea, PA 18642
www.quantumrehab.com

Canada
5096 South Service Road
Beamsville, Ontario L3J 1V4
www.quantumrehab.ca

Australia
20-24 Apollo Drive
Hallam, Victoria 3803
www.quantumrehab.com.au

New Zealand
391 Neilson Street
Penrose, Auckland 1061
www.pridemobility.co.nz

UK
(Authorised UK Representative)
32 Wedgwood Road
Bicester, Oxfordshire OX26 4UL
www.quantumrehab.co.uk

The Netherlands
(Authorised EU Representative)
De Zwaan 3
1601 MS Enkhuizen
www.quantumrehab.eu
www.quantumrehab.nl

Switzerland
(Authorised CH Representative)
SODIMED SA
Chemin Praz Devant 12
1032 Romanel-sur-Lausanne

Italy
Via del Progresso, ang. Via del Lavoro
Loc. Prato della Corte
00065 Fiano Romano (RM)
www.quantumrehab-italia.it

France
26 Rue Monseigneur Ancel
69800 Saint-Priest
www.quantumrehab.fr

Spain
Calle Las Minas Número 67
Polígono Industrial Urtinsa II, de Alcorcón
28923 Madrid
www.quantumrehab.es

Germany
Josef-Förster-Straße 6-8
33161 Hövelhof
www.quantumrehab.de

China
Room 508, Building #4
TianNa Business Zone
No. 500 Jianyun Road
Pudong New Area
Shanghai 201318
www.pridechina.cn

Serial #

UDI Label (if applicable)

INFMANU5430