SUNRISE MEDICAL

magic Mobility

XT4

CE

03/2025

ORDER FORM

Errors and omissions excepted..

Billing Address Or Customer-ID	
C.-ID:	
Name:	
Street:	
Town/PC:	
E-Mail:	
Phone:	

Shipping Address	☐ Identical To Billing Address
C.-ID:	
Name:	
Street:	
Town/PC:	
E-Mail:	
Phone:	

Order Information		
☐ Order	☐ Calculation	☐ Built-4-Me®
Purchase Order No.:		
Reimbursement Code:		
Order date: Day	Month	Year

User Weight		
Art. No.:		
User weight:		**kg**

Base Price **£ 16,950**

Client Measurements

a) Top Of Head To Seat		mm
b) Top Of Shoulder To Seat		mm
c) Underarm To Seat		mm
d) Elbow To Seat		mm
e) Top Of Pelvis To Seat		mm
f) Shoulder Width		mm
g) Trunk Width		mm
i) Hip Width		mm
j) Actual Sitting Depth		mm
m) Foot Length		mm
n) Lower Leg Length		mm
o) Actual Seat Width		mm

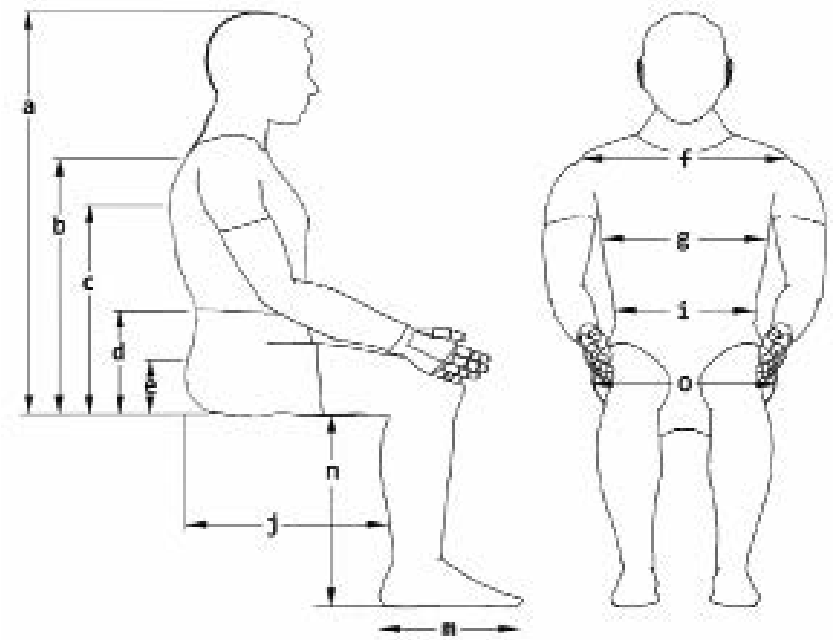

Technical Data

User Weight Capacity	160 kg with seat lift and tilt	**Ground Clearance**	125 mm
Base Width	700 mm	**Drive Wheels & Castors**	Off-road pneumatic 145 x 70, black rim
Chassis length	1000 mm	**Charger**	220 V/12 A
Drive Control	R-Net (120A Power Module)	**Battery Size**	115 Ah
Drive Motors	10 km/h, 4 x 700 W, 4-Pole Motors	**Turning radius**	1410 mm
Standard configuration	Including LED lights, Crash Tested Vehicle Tie-Downs, Maintenance-free 115 Ah batteries, 12 A charger, MPS back system, MPS seat system		
Tyres	Maximum tyre pressure depending on user weight from 0.25 to 0.55 bar (see table in instruction manual)		

Drive Unit

Power Wheelchair		£
☑ MAG010013	**XT4**	16,950

Colour Selection		£
☑ MAG6094	XT4 Midnight Black	0
☐ MAG6095	XT4 Sunset Red	0
☐ MAG6096	XT4 Horizon Blue	0

Puncture Resistance Options		£
☐ MAG7050	Pneumatic	0
☐ MAG7056	Extreme XT4 Puncture Resistant Kit	600
☐ MAG7058	Neverflat for XT4	160

Batteries		£
☑ MAG6285	Battery, 115 Ah, Maintenance free	0

Chargers		£
☐ MAG160105	Charger, Automatic, 220 V / 12 A, UK	0

Seat Tilt Modules		£
☑ MAG3502-KIT	Fixed Frame (only lighting)	0
☐ MAG5335	Fixed Frame (with Power Options)	0
☐ MAG5127	Tilt (0 - 50°)	0
☐ MAG5126	Lift and Tilt (300 mm lift, 0 - 45°)	2950

Seat Height		£
☑ MAG6552	Seat Height: Leave as is Max Lower Leg Lenght 370 mm	0
☐ MAG6553	Seat Height: +25mm front, +25mm rear Added Seat Height Versus 480 mm Standard Seat Height	0
☐ MAG6554	Seat Height: +50mm front, +50mm rear Added Seat Height Versus 480 mm Standard Seat Height	0

Seating Systems		£
☐ MAGREHABSEATPAN	Rehab Seat Pan	0

Rehab Seat Sizes

Seat width Depth minus Width Must Not Exceed 50 mm

☐ MAGSW305MM	305 mm	☐ MAGSW430MM	430 mm	☐ MAGSW560MM	560 mm
☐ MAGSW330MM	330 mm	☐ MAGSW455MM	455 mm	☐ MAGSW585MM	585 mm
☐ MAGSW355MM	355 mm	☐ MAGSW480MM	480 mm	☐ MAGSW610MM	610 mm
☐ MAGSW380MM	380 mm	☐ MAGSW510MM	510 mm		
☐ MAGSW405MM	405 mm	☐ MAGSW535MM	535 mm		

Seat depth Depth minus Width Must Not Exceed 50 mm

☐ MAGSD305MM	305 mm	☐ MAGSD430MM	430 mm	☐ MAGSD560MM	560 mm
☐ MAGSD330MM	330 mm	☐ MAGSD455MM	455 mm	☐ MAGSD585MM	585 mm
☐ MAGSD355MM	355 mm	☐ MAGSD480MM	480 mm	☐ MAGSD610MM	610 mm
☐ MAGSD380MM	380 mm	☐ MAGSD510MM	510 mm		
☐ MAGSD405MM	405 mm	☐ MAGSD535MM	535 mm		

Seat Cushion		£
☐ MAGWOSEATCUSH	No seat cushion	0
☐ MAGCMRC	MPS Removable Seat Cushion Choose Between Seat Width 405 / 455 / 510 / 560 / 610. Choose Between Seat Depth 405 / 455 / 510. Choose also Upholstery in Section B - UPH For Rehab Seat Cushion	235
☐ MAGPADDEDSC	Flat padded seat cushion Choose Seat Width And Seat Depth in Section B - Rehab Seat Sizes. Choose also Upholstery in Section B - UPH For Rehab Seat Cushion	0

UPH For Seat Cushion		£
☐ MAGSUFABRIC	Fabric	0
☐ MAGSUVINYL	Vinyl	0

Backrest		£
☐ MAGREHABCANES	Rehab canes, choose MPS or rehab insert back later	0
☐ MAGREHABFOLD	Rehab canes with fold forward, choose MPS or rehab insert back later	375

Backrest Recline Option		£
Recline Option for Rehab seat and Rehab canes		
☐ MAG3920-S-3921-F	Fixed (90° - 105°), (90°, 97,5°, 105°)	0
☐ MAG3924-S-3925-F	Manual Recline (90° - 170°)	395
☐ MAG3928-S-3929-F	Power Recline (90° - 160°) Backrest Height Minus Backrest Width Must Exceed 50 mm	1175
☐ MAG3932-S-3933-F	Anti-shear power recline (95° -155°) Backrest Height Minus Backrest Width Must Exceed 50 mm, not with SW 305, 330, 355	1875
Recline option for Rehab seat and Rehab canes, Foldable to the front		
☐ MAG3922-S-3923-F	Fixed (90° - 105°), (90°, 97,5°, 105°)	0
☐ MAG3926-S-3927-F	Manual Recline (90° - 170°)	395
☐ MAG3930-S-3931-F	Power Recline (90° - 160°) Backrest Height Minus Backrest Width Must Exceed 50 mm	1175
☐ MAG3934-S-3935-F	Anti-shear power recline (95° -155°) Backrest Height Minus Backrest Width Must Exceed 50 mm, not with SW 305, 330, 355	1875

Insert Backrest		£
☐ MAGBACKRESTINSERT	Magic Rehab insert backrest Only Available With MAGREHABCANES And MAGREHABFOLD	535
☐ MAGMPSINSERT	MPS insert backrest Only with MTO fabric upholstery (except Standard), Choose Size in MPS Backrest - Sizes Section	0

Please Fill In Only If MPS Insert Backrest Chosen

MPS Insert Back - UPH		£
☑ MAGFABRICBR	Fabric	0
☐ MAGVINYLBR	Vinyl	0

MPS Insert Backrest – Sizes		£
Backrest width Backrest Height Minus Backrest Width Must Exceed 50 mm		
☐ MAGBW405MM	405 mm	0
☑ MAGBW455MM	455 mm	0
☐ MAGBW510MM	510 mm	0
☐ MAGBW560MM	560 mm	0
☐ MAGBW610MM	610 mm	0
Backrest height Backrest Height Minus Backrest Width Must Exceed 50 mm		
☑ MAGBH535MM	535 mm	0
☐ MAGBH585MM	585 mm	0

Please Fill In Only If Rehab Insert Backrest Chosen

Rehab Insert Backrest Cushion		£
☐ MAGBRMRJ	Junior (350 mm height)	0
☐ MAGBRMRJXS	Junior (Xtra tall, 410 mm height)	0
☐ MAGBRMRMS	Medium (Short, 430 mm height)	0
☐ MAGBRMRM	Medium (480 mm height)	0
☐ MAGBRMRMXT	Medium (Xtra tall, 530 mm height)	0
☐ MAGBRMRLS	Large (Short, 430 mm height)	0
☐ MAGBRMRL	Large (480 mm height)	0
☐ MAGBRMRLXT	Large (Xtra tall, 530 mm height)	0

Rehab Back Insert UPH		£
☐ MAGFABRICBR	Fabric	0
☐ MAGVINYLBR	Vinyl	0

Rehab Back Insert Bolster Size		£
For Magic Rehab back cushion large/medium		
☐ MAGBOLSTERS	Shallow (110 mm depth)	0
☐ MAGBOLSTERSTD	Standard (160 mm depth)	0
☐ MAGBOLSTERD	Deep (220 mm depth)	0
☐ MAGNOBOLSTER	No bolster	0

Rehab Back Insert Lumbar		£
☐ MAGLUMBARS	Shallow (12 mm insert)	0
☐ MAGLUMBARSTD	Standard (25 mm insert)	0
☐ MAGLUMBARD	Deep (35 mm insert)	0
☐ MAGNOLUMBAR	No lumbar	0

Insert Back Clamps		£
☐ MAG3495	Standard, fixed clamps	0
☐ MAG3492-PI	Quick Release	0

Push Handles		£
☐ MAG0057-PI	MPS Push Rail	135
☐ MAGPRHA	MPS Height adjustable handles	135
☐ MAG0056-WOKOR-2	MPS Peg handles	135
☐ MAG46354636	Rehab peg handles	135

Backrest Bag Hooks		£
☐ MAG5724	MPS Bag hooks (pair) on backrest	35
☐ MAG5723	Rehab Bag hooks (J-shaped) on spreader bar	35

Headrest		£
MPS Headrest		
☐ MAG2770VI	MPS Headrest, MPS Mount, Fabric to match backrest Mounting As For Car Seat Headrests, With Fabric Cover	270
Rehab Headrest		
☐ MAGREHABSTD	Magic Rehab Standard	160
☐ MAGREHABWIDE	Magic Rehab Wide	220
Headrest Mount (for REHAB headrests only)		
☐ MAG4113	2 AXIS (single stem, 2 pivot points)	165
☐ MAG4114	3 AXIS (single stem, 3 pivot points)	190
☐ MAG4115	MULTI AXIS (single stem)	215

Rehab Headrest		£
☐ MAGFABRICHR	Fabric	0
☐ MAGVINYLHR	Vinyl	0

Armrest – Types		£
☑ MAG3572	Pair - standard armrest, single stem	0
☐ MAG3994	Pair - standard armrest, double stem	160
☐ MAGFLEXIARM	Pair - flexi armrest	375
☐ MAG6503-6502	Pair - flexi armrest with locked position	550
☐ MAG3331-6500	Pair - flexi armrest with locking post Locking Post Attached To Seat Rail	600
☐ MAG3727-6501	Pair - flexi armrest with locking post and drop down	700

Armrest – Heights											
☐	MAGAH220MM	220 mm	☐	MAGAH260MM	260 mm	☐	MAGAH300MM	300 mm	☐	MAGAH340MM	340 mm
☐	MAGAH230MM	230 mm	☐	MAGAH270MM	270 mm	☐	MAGAH310MM	310 mm	☐	MAGAH350MM	350 mm
☐	MAGAH240MM	240 mm	☐	MAGAH280MM	280 mm	☐	MAGAH320MM	320 mm	☐	MAGAH360MM	360 mm
☐	MAGAH250MM	250 mm	☐	MAGAH290MM	290 mm	☑	MAGAH330MM	330 mm	☐	MAGAH370MM	370 mm

☐	MAGAH380MM	380 mm
☐	MAGAH390MM	390 mm

Armpad – Style		£
☑ MAGAP75-WOKOR-2	75 mm armpads	0
☐ MAG3971-3972	MPS armpads	55
☐ MAG3712	MPS flip-out armpads	80
☐ MAGAP50-2	50 mm armpads	160
☐ MAG6711	Waterfall armpads	160
☐ MAG3775	Gutter armpads	160
☐ MAG6750	Gutter armpads with elbow support pad	160
☐ MAG6751	Gutter armpads with hand pad	160
☐ MAG6752	Gutter armpads with hand pad and elbow support pad	320

Armpad – UPH		£
☑ MAGAPVINYL	Vinyl	0
☐ MAGAPFABRIC	Fabric	0

Armrest Bag Hooks		£
☑ MAGHOOKA2RH	Right Side Armrest baghooks	35
☐ MAGHOOKA2LH	Left Side Armrest baghooks	35

Footplate Height

☐	MAGLL300MM	300 mm	☐	MAGLL340MM	340 mm	☑	MAGLL380MM Not with MAG6552	380 mm	☐	MAGLL420MM Not with MAG6552	420 mm
☐	MAGLL310MM	310 mm	☐	MAGLL350MM	350 mm	☐	MAGLL390MM Not with MAG6552	390 mm	☐	MAGLL430MM Not with MAG6552	430 mm
☐	MAGLL320MM	320 mm	☐	MAGLL360MM	360 mm	☐	MAGLL400MM Not with MAG6552	400 mm			
☐	MAGLL330MM	330 mm	☐	MAGLL370MM	370 mm	☐	MAGLL410MM Not with MAG6552	410 mm			

Legrest – Choice

		£
☑ MAGCPLEGREST	Centre Post legrest	0
☐ MAGCPOWER	Centre Mount Power elevating legrest Not Available With Fixed Tilt MAG3502-KIT	1500
☐ MAG3528	Swingaway legrest	0
☐ MAG3527-ME	Manual Elevating Swinagaway legrest	425
☐ MAG3526-ME	Power Elevating Swingaway legrest Not Available With Fixed Tilt MAG3502-KIT	850

Footplate

		£
☑ MAG4055FIX	Centre Post: 1 piece fixed footplate (footplate width 325 mm)	0
☐ MAG4055	Centre Post: 1 piece flip up footplate (footplate width 260 mm)	0
☐ MAG4055-2	Centre Post: 2 piece flip up footplate (footplate width 260 mm)	0
☐ MAG4755	CMPE: 1 piece flip up	0
☐ MAG4755-2	CMPE: 2 piece flip up	0
☐ MAGFLIPUP	2 piece flip up Only For Swing Away Legrets	0
Footplate Options		
☐ MAG4312	Swingaway footplate lock Only For Swing Away Legrets	55
☐ MAG4260	Abduction block (neoperene)	55

Calf Support

		£
☐ MAGCALFSUPPORT	Calf support standard Selection not necessary with MAGCPOWER, Is always included with MAGCPOWER	135

Knee Pads

		£
☐ MAG4247	Knee pads	120
☐ MAGKPCMPE	Knee pads for CMPE	120
☐ MAG4660	Knee pads for non-elevating swingaway legrests	120
☐ MAG4104	Knee pads for elevating swingaway legrests	120

Lap Belt

						£
☑ MAG4973-MPS-4974-R	Standard Posture belt	☐ 500 mm	☑ 600 mm	☐ 700 mm	☐ 800 mm	0
☐ MAG4973-4974-PBPAD	Standard Posture belt with 2 posture belt pads	☐ 500 mm	☐ 600 mm	☐ 700 mm	☐ 800 mm	100
☐ MAG6540	4 point seat belt (PB4P)	☐ 500 mm	☐ 600 mm	☐ 700 mm	☐ 800 mm	180
☐ MAG6540-2XPBPAD-4	4 point seat belt with 2 posture belt pads	☐ 500 mm	☐ 600 mm	☐ 700 mm	☐ 800 mm	1850
☐ MAG4730	Retractable lap belt (for rehab seat)					110
	☐ MAGLBLH		Left sided buckle			0
	☐ MAGLBRH		Right sided buckle			0
☐ MAG4731	Retractable lap belt (for MPS seat)					110
	☐ MAGLBLH		Left sided buckle			0
	☐ MAGLBRH		Right sided buckle			0

Thoracic Support (pad and mount)		£
☐ MAG1506	Adjustable brackets (MPS back)	530
☐ MAG4943	Adjustable brackets (MPS insert back)	530

Hip Pads - In Vinyl		£
☐ MAGHPKIT	Hip pads on adjustable brackets (pair)	270

Harness		£
☐ MAGHARP	Harness pediatric	160
☐ MAGHARQ	Harness standard	160

Controller – R-Net		£
☑ MAGPG-JSMLEDL	Basic LED JSM (no colour screen)	0
☐ MAGPG-JSM-PI	Colour Screen JSM	160
☐ MAGPG-JSM2IRL	Colour screen JSM2 + IR only	315
☐ MAGPG-JSMIRBT	Colour screen JSM2 + Bluetooth + IR	530

Display Language Selection		£
☐ MAG119001	English	0

Control+5 Module		£
☐ MAG158709	CTRL+5 Switch Module (button)	320
☐ MAG158708	CTRL+5 Switch Module (Toggle style)	320

Control+5 Location		£
☐ MAG5430	On the armrest, same side as joystick	0
☑ MAG5431	On the armrest, opposite side to joystick	0
☐ MAG5432	Attendant (rear mounted)	100

Joystick Knob Option		£
☑ MAGKNOBSTD	Standard joystick knob	0
☐ MAGPG-KS80	Stick S80	80
☐ MAGPG-KCHIN	Chin C38	80
☐ MAGPG-KB32	Ball B32	80
☐ MAGPG-KB38	Ball B38	80
☐ MAGPG-KM48	Mushroom M48	80
☐ MAGPG-KTBAR	T-Bar T80	80
☐ MAGPG-KSB70	Soft Ball SB70	80

Joystick Position		£
☑ MAGJSRIGHT	Joystick Right	0
☐ MAGJSLEFT	Joystick Left	0
☐ MAGPGCYPGC2.03725	Interchangeable to Left and Right	215
☐ MAG3329JSM-RH	Mount JSM as an attendant control - Right (Rehab back)	315
☐ MAG3329JSM-LH	Mount JSM as an attendant control - Left (Rehab back)	315

Swingback Options		£
☑ MAG110050	Joystick Mounting, Fixed	0
☐ MAG3083-KIT-OS	Swingback joystick to the outside (with magnets)	0
☐ MAG3083-KIT-IS	Swingback joystick to the inside (with magnets)	0
☐ MAG3082-KIT-OS	Swingback joystick to the outside (with locking latch)	215
☐ MAG3082-KIT-IS	Swingback joystick to the inside (with locking latch)	215

Joystick Mounting Position		£
☑ MAG4980	Height Adjustable Joystick Stem - for standard joystick stem	105
☐ MAG3713	Height Adjustable Joystick Stem - for swingback joystick stem	105
☐ MAG3729STD	Quick release stem (for standard joystick stem only)	0
☐ MAG3729SB	Quick release stem (with swingback)	0

Speciality Controls		£
☐ MAG5436	Omni2	1170
☐ MAGPG-OMNISCANNER	Omni2 Enhanced 6-way scanner (single switch feature)	1170
	Omni2 location	
	☐ MAGOMNILH: Omni2 location, Left ☐ MAGOMNIRH: Omni2 location, Right	

Attendant Control		£
☐ MAG3330AM-KIT	Attendant control module for MPS back	290
☐ MAG3329AM-KIT	Attendant control module for Rehab back	290
	Attendant Control	
	☐ MAGACLH: Attendant Control, Left ☐ MAGACRH: Attendant Control, Right	

Accessories		£
☐ MAG4471	RAM® Cup holder	55
☐ MAG4627	Magic Mobility Steel cup holder Drink Holder (Always Mounted On The Opposite Side Of The Control Panel/Table)	105
☐ MAG4478	Magic Mobility Steel cup and phone holder (combined)	150
☐ MAG4705	Accessory charger (1x12V + 2xUSB) - side rail mounted, same side as joystick	160
☐ MAG6629	Accessory charger (2xUSB) - side rail mounted, opposite to joystick	160
☐ MAG4801	Accessory charger (2xUSB) - armrest mounted, same side as joystick	160
☐ MAG6594	Accessory charger (2xUSB) - armrest mounted, opposite to joystick	160
☐ MAG5360	Loud horn	55
☐ MAG4834	A4 Accessory bag (mounted on the backrest)	105
☐ MAG4834RH	A4 Armrest bag (mounted on the right armrest)	105
☐ MAG4834LH	A4 Armrest bag (mounted on the left armrest)	105
☐ MAG4834-2	A4 Armrest bags (mounted on the left and right armrest)	210
☐ MAG5320RHI	A5 Armrest bag (mounted internally, right armrest)	105
☐ MAG5320LHI	A5 Armrest bag (mounted internally, left armrest)	105
☐ MAG5320RHE	A5 Armrest bag (mounted externally, right armrest)	105
☐ MAG5320LHE	A5 Armrest bag (mounted externally, left armrest)	105
☐ MAG48345320I	A4 & A5 Armrest bags (A4 joystick side, A5 internal facing)	210
☐ MAG48345320	A4 & A5 Armrest bags (A4 joystick side, A5 external facing)	210
☐ MAG5699	Additional Armrest Receiver needed if more accessories should be mounted	35
☐ MAGCOVER	Wheelchair cover	95

Clear Tables		£
☐ MAG2677	Swingaway small table, 320 x 240mm not with MAGPGCYPGC2.03725, interchangable joystick mount	335
☐ MAG7700	Swingover table with magnet	335

Dimension Matrix MPS-SEAT

BACK

Dimension Matrix REHAB-SEAT

BACK

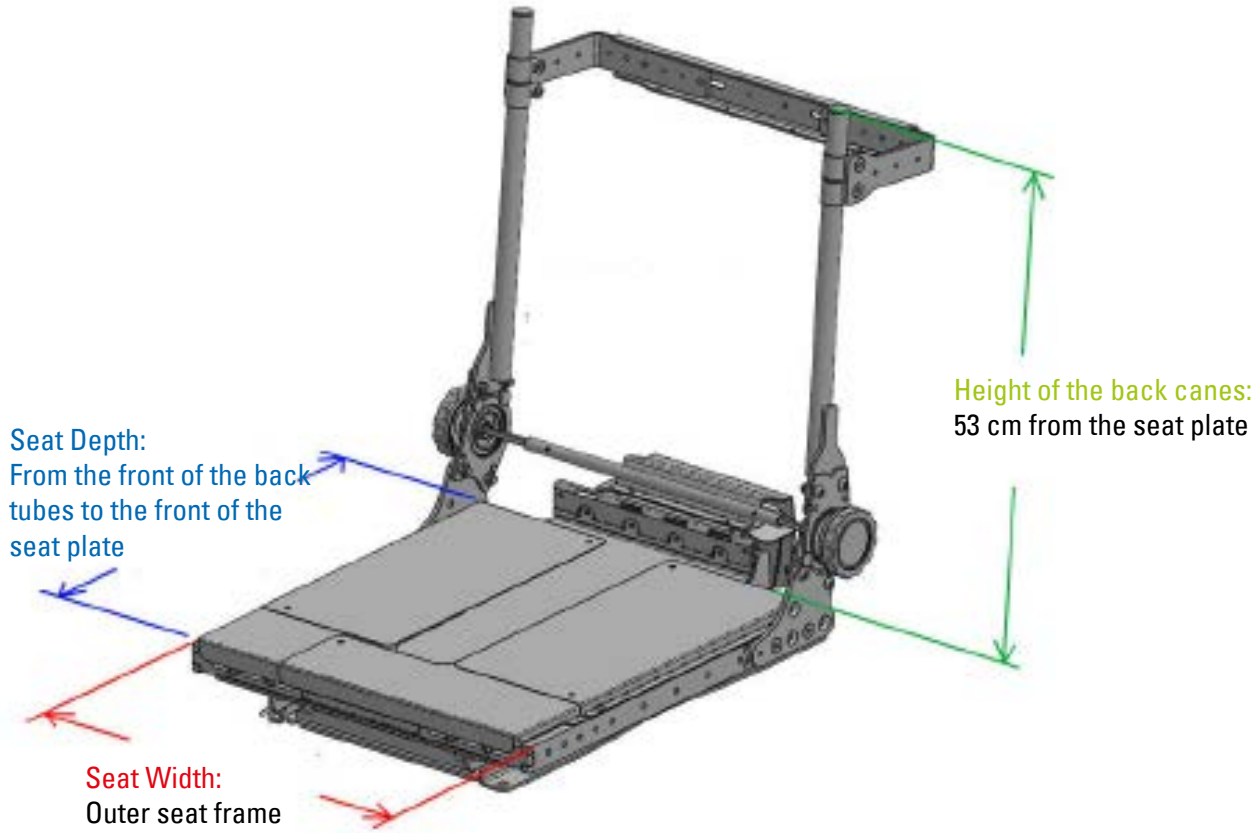

Seat Cushion For Rehab Seat

BACK

MAGCMRC

Backrest for Rehab Seat Pan

BACK

MAGMPSBACKREHAB

Magic Rehab Insert Size

BACK

MAGIC REHAB INSERT SIZE

Chest Width 'C'	Height 'Y' (mm)
330-470mm	
Large (Xtra tall)	530
Large	480
Large (Short)	430
280-420mm	
Medium (Xtra tall)	530
Medium	480
Medium (Short)	430
260-400mm	
Junior (Xtra tall)	410
Junior	350

- Bolsters can be mounted upside down for increased armpit support
- Bolster heights can be offset up and down, up to 25mm between each side (asymmetric)

© Magic Mobility 2014

Rehab Seat and Back Sizing

BACK

REHAB SEAT AND BACK SIZING

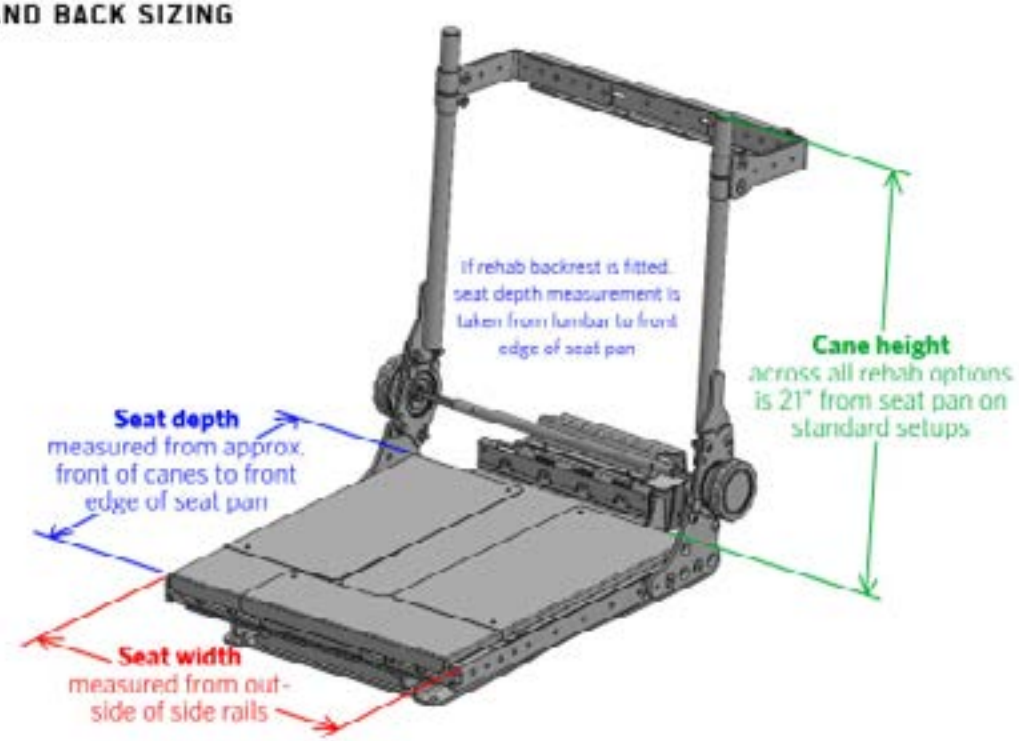

© Magic Mobility 2014

Colors

BACK

Drive Wheels

BACK

XT4

OFF-ROAD

- Soft ride with good shock absorption
- Best traction on all surfaces
- 700mm base width
- Tyre Liner available

Special Tyre Options

BACK

MAGIC 360 PUNCTURE RESISTANCE

NEVERFLAT

- Offers good puncture protection for pneumatic tyres

PUNCTURE RESISTANT KIT
(WITH PNEUMATIC OFF-ROAD & CROSSOVER TYRES)

- Offers comprehensive protection against glass, tacks, thorns, etc.
- Produced with aramid fibre and natural rubber
- Filled with Neverflat to give extra protection
- Can be retrofitted to all Magic Mobility chairs with knobby tyres

Headrest

BACK

MPS HEADREST

Armrests

BACK

ARMREST TYPE (1)

STANDARD

Note: 25mm of extra adjustment is added to bottom

DOUBLE STEM

For bariatric users

FLEXI

Flip-up, paralleling

Note: Depending on requested armrest height the Flexi arms will be assembled using slightly different parts. Therefore the range for each armrest will not be the full 220-440mm

Requested Height	Actual Range (Flexis on MPS back)
220-330mm	220-370mm
340-370mm	250-400mm
380-440mm	330-440mm

Requested Height	Actual Range (Flexis on Rehab back)
220-330mm	100-360mm
340-440mm	275-440mm

ARMPAD ADJUSTMENTS (ALL ARMREST TYPES)

FLEXI ARMREST ADJUSTMENTS

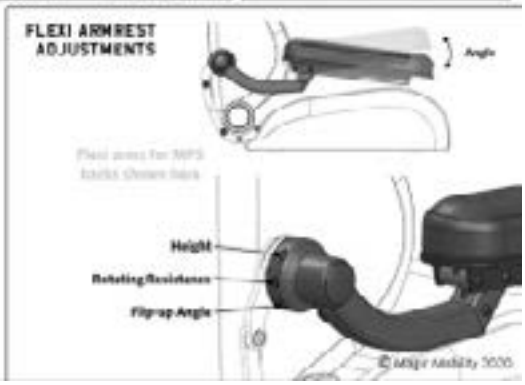

ARMPADS

If **MPS, 50mm, 75mm, gutter or waterfalls** armpads are selected, the length of armpad fitted will generally be based on the seat depth. See below table for details. If specific armpad length is required please state this on order form

SEAT DEPTH ►	12"	13"	14"	15"	16"	17"	18"	19"	20"	21"	22"	23"	24"	
50mm Arm Pad 75mm Arm Pad Gutter Arm Pad Waterfall Arm Pad	255	255	305	305	305	355	355	355	380	380	380	380	380	← Armpad length
	— 50mm not available —								— 50mm not available —					
MPS Arm Pad	-	-	-	-	355	355	405	405	460	460	460	460	460	← Armpad length

Joystick Mounting

BACK

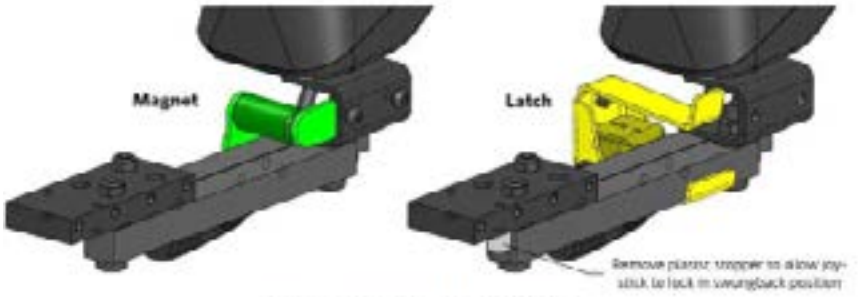

Swingback Joystick Release Options

Magnet	Latch
• Requires more force but no dexterity to release	• Requires minimal force but some dexterity to release
• Can potentially release if wheelchair is being driven erratically or over rough terrain	• Will stay locked at all times unless latch is pushed
• Releases more easily if impacted	• Less likely to release if impacted, potentially causing more damage
-	• Can be locked in fully swung-back position (optional)
-	• Custom levers can be screwed to latch to make releasing it easier for clients with less hand movement

Joystick Knobs

BACK

Footplates

BACK

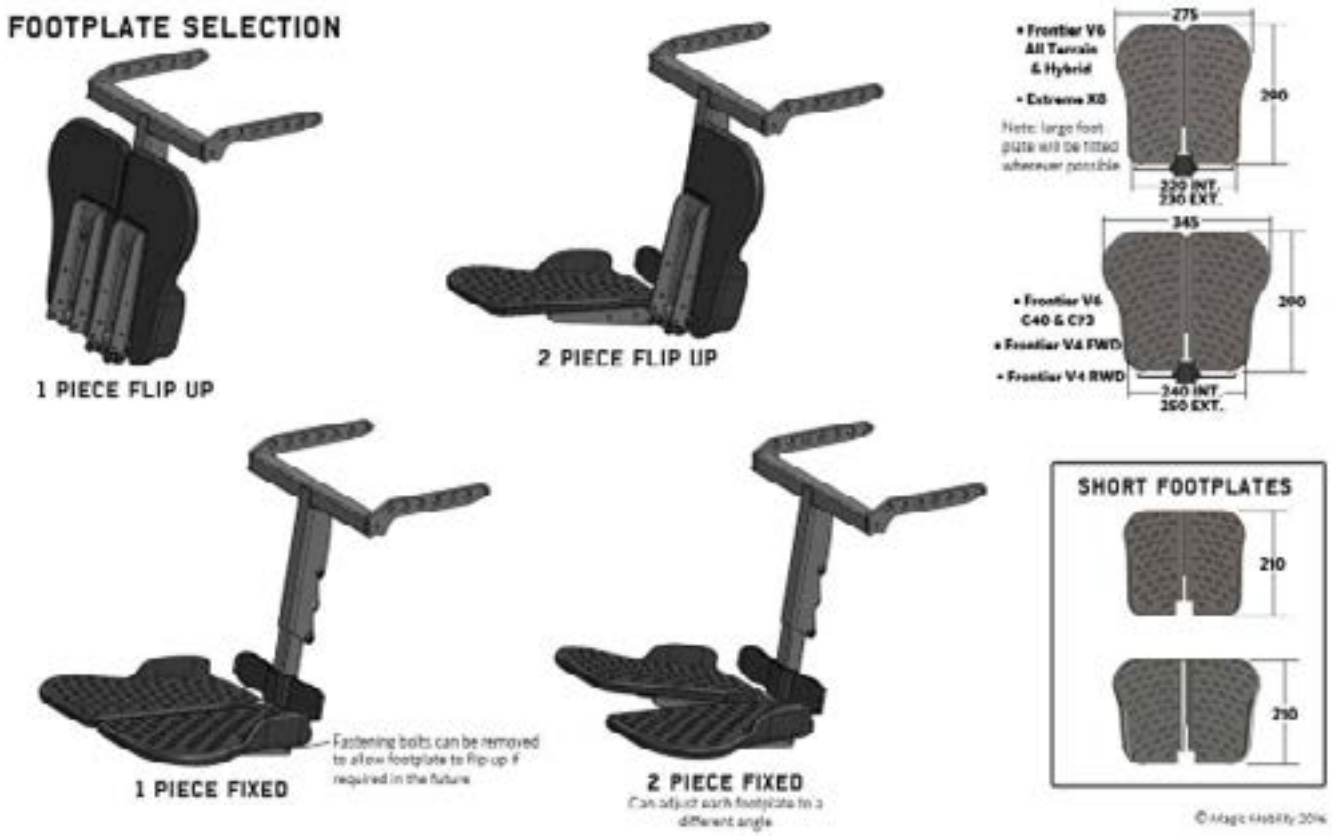

Legrest MK2 Footplate Lock

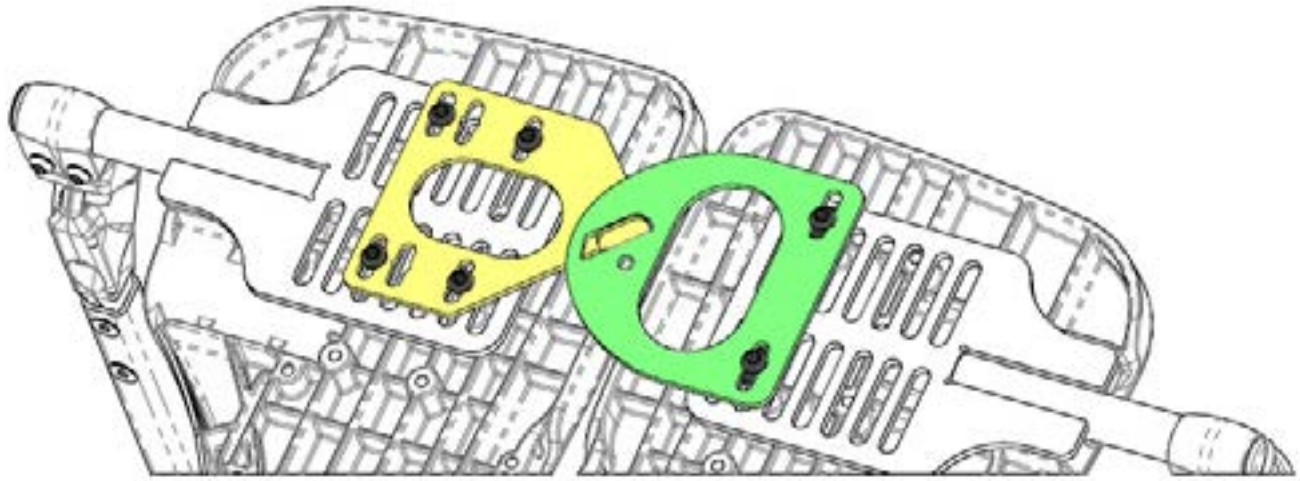

Knee Pads

BACK

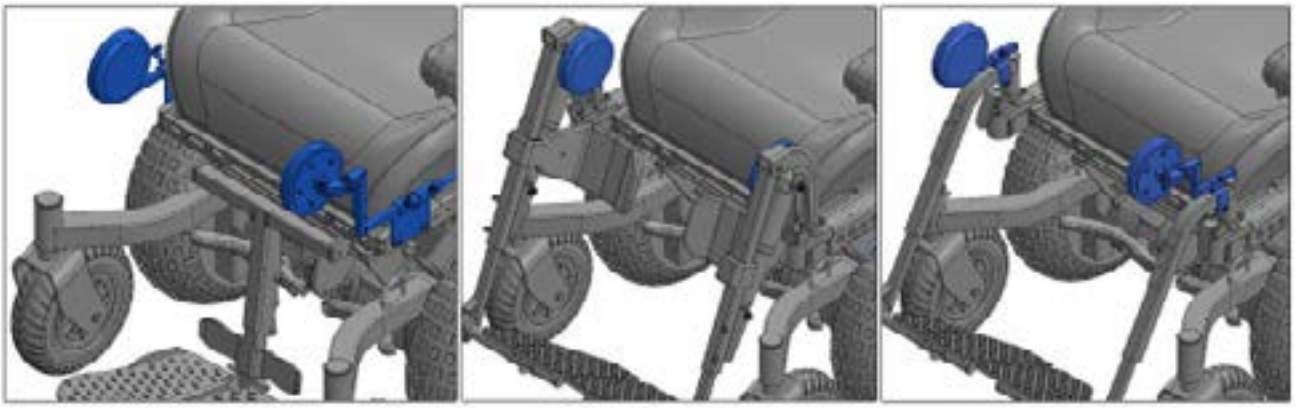

Centre mount legrest
(fixed and power elevating)
2 axes of adjustment

Power or gas swingaway legrest
Fixed kneepad attached to legrest pivot

Standard swingaway legrest
3 axes of adjustment

Rear Boot Plate

BACK

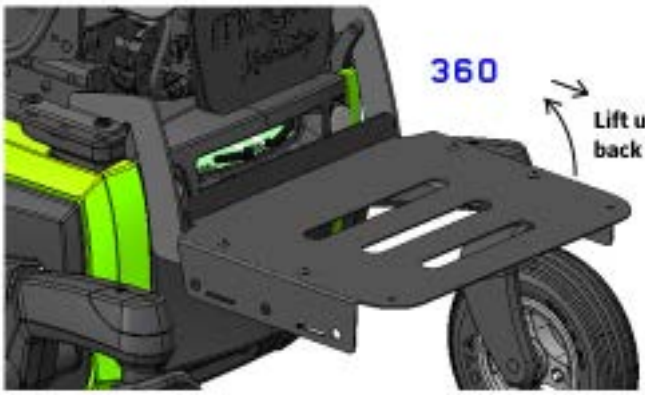

Cup Holder

BACK

© Magic Mobility 2016

Armrest Bag

BACK

For armrest heights less than 320mm please select A5 bag (otherwise bag sits on wheel)

Fits A4 size documents

Mounts under armrest
(unless otherwise requested)

If swingback joystick is selected it is generally more suitable to fit accessory bag to opposite side

© Magic Mobility

Table Options

BACK

TABLE OPTIONS

Clear polycarbonate table shown below. Black HD plastic is also available (typically without folded edges)

Unless a drawing has been supplied with specifications for cut out sizes for stomach and joystick, the slide in and swingover tables will be provided as a kit

Table stem slides into opposite side to joystick

SLIDE IN LARGE TABLE
Table rests on armpad opposite to stem

SWINGOVER LARGE TABLE
Table rests on both armpads

DOUBLE STEM LARGE TABLE
For chairs with attendant control ONLY (no joystick)

SWINGAWAY SMALL TABLE
Width 320 x Depth 240

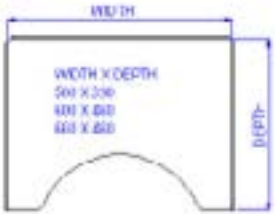

© Magic Mobility 2016

Comments

XT4	£
Base Price	
Total Of Additional Equipment	
Packaging And Transport	
Exclusive VAT	
VAT	
Total Price	

Date			Signature
Day	Month	Year	

Sunrise Medical GmbH

Kahlbachring 2-4
69254 Malsch/HD
Tel: +49 (0) 7253-9800
Fax: +49 (0) 7253-980111
E-Mail: kundenservice@sunrisemedical.de
www.SunriseMedical.de