karma

Powered Wheelchair User Manual

Evo Lectus

CE

A Better Wheelchair, A Better Fit

1. Index

1. Index 0
2. How to contact Karma 1
3. Declaration of conformity 2
4. Introduction 3
   4.1 Chassis Number 3
5. Used symbols for warning, caution and note 5
6. Warranty 6
7. Intended use / Intended user 7
8. Intended environment 7
9. Tyre pressure 7
10. The wheelchair 8
   10.1. Chassis 8
      10.1.1 Chassis suspension 8
      10.1.2 Transport fixation loops 9
      10.1.3 Lights and reflectors 9
      10.1.4 Battery compartments 10
      10.1.5 Main fuse 12
      10.1.6 Seat lift (option) 13
   10.2 Seat 14
      10.2.1 Upholstered seat cushion 14
      10.2.2 Seat rail 14
      10.2.3 Seat tilt (option) 15
      10.2.4 Upholstered backrest 16
      10.2.5 Power recline backrest (option) 16
      10.2.6 Upholstered armrest 17
      10.2.7 Legrest 17

10.2.8 Powered legrest adjustment (option) 17
10.2.9 Upholstered headrest (accessory) 18
10.2.10 Upholstered calf support (accessory) 19
10.2.11 Upholstered lateral support (accessory) 19
10.2.12 Upholstered hip support (accessory) 20
10.2.13 Positioning belt 20
10.3 The controls 21
10.3.1 Side steering control 21
10.3.2 Tray table control / Desktop control (option) 21
10.3.3 Attendant control (accessory) 22
10.4 Other optional accessories 23
11. The first set up 24
11.1 Chassis suspension 24
11.1.1 Spring setting 24
11.1.2 Damper setting 26
11.2 Seat adjustments 27
11.2.1 Seat depth 27
11.2.2 Seat width 30
11.2.3 Armrest width 31
11.2.4 Armrest height 35
11.2.5 Armrest angle 36
11.2.6 Armrest depth 37
11.2.7 Armrest inside angle 38
11.2.8 Legrest length 39
11.2.9 Legrest angle 40
11.2.10 Footplate angle 41
11.2.11 Calf support settings 42
11.2.12 Headrest settings 44
11.2.13 Hip support settings 46

11.2.14 Lateral support settings 49
11.3 Positioning belts 50
11.4 Control settings 51
11.4.1 Height adjustment side control: 51
11.4.2 Depth adjustment side control 51
12 Control panel 52
12.1 Charging socket 52
12.2 Joystick 52
12.3 Display 53
12.3.1 Battery indicator (top bar) 53
12.3.2 Focus light (top bar) 53
12.3.3 Profile name (main screen) 54
12.3.4 Clock (main screen) 54
12.3.5 Speed display (main screen) 54
12.3.6 Speed bar (main screen) 55
12.3.7 Inhibit (main screen) 55
12.3.8 Set functions (main screen) 55
12.3.9 Additional options (main screen) 56
12.3.10 Message screen (main screen) 56
12.3.11 Current profile (base bar) 58
12.3.12 Motor temperature (base bar) 58
12.3.13 Control system temperature (base bar) 58
12.3.14 Wheelchair lock 58
12.4 Buttons 60
12.4.1 On/off button 60
12.4.2 Horn button 60
12.4.3 Speed decrease button 60
12.4.4 Speed increase button 61
12.4.5 Mode button 61

12.4.6 Profile button 61
12.4.7 Hazard Warning Button and LED 61
12.4.8 Lights Button and LED 61
12.4.9 Left Indicator Button and LED 61
12.4.10 Right Indicator Button and LED 62
12.5 Jack sockets 62
12.5.1 External profile switch jack 62
12.5.2 External on/off switch jack 62
12.6 R-net Connectors 63
12.7 Joystick 64
13 Electric system 65
13.1 Batteries 65
13.2 Fuses 66
13.3 Additional fuses 66
14 Using the wheelchair 67
14.1 General warnings and advices 67
14.2 Use in combination with other products 68
14.3 hot and cold surfaces 68
14.4 Danger of pinching 69
14.5 Surroundings 70
14.6 Precautions to prevent dangerous situations 70
14.7 Use on slopes: driving on downhill slopes 71
14.8 Use on slopes: driving on uphill slopes 72
14.9 Driving on sideways slopes 74
14.10 Obstacle climbing 75
14.11 use in presence of electromagnetic fields 76
15 Driving the wheelchair 77
15.1 Driving in general 77
15.2 Driving technique 78

15.3 Stopping the wheelchair 79
16 Using the powered seat functions 79
16.1 Seat lift 80
16.2 Seat tilt 81
16.3 Backrest 82
16.4 Legrest 83
16.5 Relax position 84
16.6 Using additional function of the wheelchair menu 85
17 Handling the mechanical brakes 86
17.1 Release the mechanical brakes 86
18 Charging the maintenance free batteries 87
18.1 Battery level 87
18.2 Charging socket 88
18.3 Disposal of broken or worn out batteries 90
19 Transport of the wheelchair 91
19.1 4-point tiedown restraint system 91
19.1.1 Transportation guideline 93
19.1.2 Safety belt 94
19.2 Transportation using Dahl Docking station 97
19.2.1 Mounting of the Dahl locking adapter on the wheelchair 98
19.2.2 Locking procedure: 102
19.2.3 Unlocking procedure: 103
19.2.4 Manually unlocking in case of electric failure or accident: 103
19.2.5 Safety belt 104
19.3 Transportation on an airplane 107
19.3.1. Batteries 107
19.3.2. The wheelchair’s dimensions and weight 107
20 Maintenance and repairs 108
20.1 Battery charging 108

20.2 Short term storage 108
20.3 Long term storage 109
20.4 Tools 110
20.5 Wheels and tires 111
20.5.1 Puncture repair 111
20.6 Cleaning 113
20.6.1 Upholstery, cloth / 3d mesh 113
20.6.2 Metal surfaces 113
20.6.3 Plastic covers 113
20.7 Brake release, freewheel mode 114
20.8 Battery replacement 114
20.9 Replacing the main fuse 116
21 Refurbishment and re-use of the product. 117
22 Disposal of the product 117
23 Trouble shooting 118
23.1 Diagnostics R-Net LCD 119
24 Technical specifications 120
25 Accessories 122

2. How to contact Karma

Head office Karma

Karma Medical
NO.2363, Sec. 2
University Road
Min-Hsiung Shiang
Chia-Yi 621
Taiwan
www.karma.com.tw

European representative:

Karma Mobility Spain S.L.
C/ Periodista Francisco Carantoña Dubert nº23 bajo
33209 Gijón (Asturias)
Spain

phone: +35 984 39 09 07
mail: karma@karmamobility.es
web: www.karmamobility.es

Produced and published by Karma Medical, Taiwan
Technical changes and print errors prohibited.

3. Declaration of conformity

karma

Declaration of Conformity

As a wheelchair manufacturer, the company:

KARMA MEDICAL PRODUCTS CO., LTD
No.2363 Sec.2 UNIVERSITY RD., MIN-HSIUNG
SHIANG, CHIA-YI 621, TAIWAN

And the European representative:

KARMA MOBILITY, S.L.
C/ PERIODISTA FRANCISCO CARANTOÑA
DUBERT, 23 Bajo 33209 GIJÓN - ASTURIAS (SPAIN)

declare under his sole responsibility that the wheelchair products:

Power Wheelchairs products: EVO LECTUS Series

have been classified as Class 1 and are manufactured in conformity with the provisions of the Medical Device Directives 93/42/EEC 2007 and 2007/47/EC, and are in conformity with relevant European harmonization standards of EN 12184:2014.

Signature :

Kenny I.C. Chen
General Manager

Date : 2020 Feb. 12

4. Introduction

Congratulation with your new Karma product! This product has been made with great care and dedication. The Karma product will increase your freedom of mobility and independence. Karma and its resellers all over the world are there to support in any way. So, if you have questions or suggestions about our products, do not hesitate to get in contact with us at globalsales@karma.com.

Before you use the Karma product, we strongly recommend you read this manual carefully and always keep it with your product. This way you are always able to find additional information when needed.

Karma runs the policy of continuously product improvement. Therefore, pictures of products or options as shown in this manual might be different from what you see in this manual. Karma reserves the right to make changes to the product without prior notice.

4.1 Chassis Number

The chassis number is a very important number. Your wheelchair will be stored in our data system under this main number. You can find the number on the rear end of the chassis.

Chassis serial plate

The used symbols on the chassis plate are explained below:

describes the model and type of the product.

stands for indoor- and outdoor use (Class B).

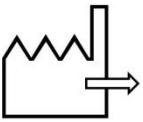

stands for the date of production.

this icon stands for the maximum driving speed.

this icon stands for the maximum slope to drive on.

this icon stands for the maximum user weight.

SN: stands for the chassis serial number.

5. Used symbols for warning, caution and note

General warnings are indicated by a symbol. There are three levels of warnings:

1. Warning

⚠ WARNING

If you see this sign please use extreme caution where this symbol appears. Neglecting these warnings can lead to personal or material damage.

2. Caution

⚠ CAUTION

If you see this symbol, use caution to prevent dangerous situations.

3. Note

ⓘ NOTE

If you see this symbol we provide additional information which might be good to know. Please take notice of this information.

ⓘ NOTE

● Before using the wheelchair, you should read this manual to get familiar with this product.
● Make sure the local reseller has set up the product in a proper way to exactly fit your needs and requirements.
● Always be accompanied by an attendant person when you drive the wheelchair for the first time.
● The first drive should take place in an safe and wide area so you can get acquainted to your wheelchair without any danger.
● Always start to drive the wheelchair in the lowest possible driving speed first.

6. Warranty

Karma Medical supplies a warranty of frame for a period of 5 years and electrical system (controller, motor, charger, actuator and PCB) for a period of 1 year after delivery to the customer. Your local supplier will carry out this warranty. For battery warranty, it is subject to the periods set by the manufacturers. Please contact your local supplier in detail.

For a warranty claim you get in contact with our local authorized Karma reseller or directly with Karma Mobility S.L. Make sure you also provide the chassis serial number of your product.

The warranty does not apply to damage or faults of the product caused by wrong or improper use, or neglected maintenance. The evaluation of it is the privilege of Karma Medical or a representative to be appointed by Karma Medical.

This guarantee does not apply to components susceptible to wear such as bearings, cables, carbon brushes, circuit breakers, covers, footplates, light bulbs, pads, side guards, upholsteries, wheels and similar parts.

Karma Medical reserves the right to alter the specifications at any time. No responsibility can be accepted for any changes in the specifications. Change of specification can be caused by e.g. availability of parts, product improvement based on market experience, changed legislations etc.

Besides, Karma Medical is not responsible for the transportation costs for repair and replacement.

⚠ WARNING

The use of non-original parts on this product can lead to personal or material damage. Karma Medical cannot be held responsible for these results.

Repairs executed by unauthorized persons can lead to personal or material damage. Karma Medical cannot be held responsible for these results.

If you have any doubt about the service provided to your wheelchair, please contact Karma Medical Taiwan for information.

7. Intended use / Intended user

The EVO Lectus powered wheelchair is meant to provide mobility to persons who are not able to walk, stand or use a manual wheelchair, but who are very well able to control and use the interface of a powered wheelchair. Apart from the horizontal mobility, the EVO Lectus powered wheelchair provides the user with mobility in vertical direction. This includes for example to reach light switches, a door bell and doorknobs. The wheelchair is designed for a maximum user weight of 136 kg.

It is strongly suggested to have the use of the wheelchair evaluated by a trained doctor, therapist or other qualified and trained staff. This wheelchair is not suitable for persons who do not have the cognitive skills to drive a powered wheelchair by themselves. Also, it is not suitable for visually impaired persons. Only well-trained users are suitable for operating the EVO Lectus powered wheelchair.

8. Intended environment

The EVO Lectus powered wheelchair is not restricted to only indoor or only outdoor use. Because the large driving wheels are placed in the front, the wheelchair is extremely maneuverable and is able to cope with many terrain differences. This, combined with the compact size of the EVO Lectus and the excellent speed range and battery capacity, this makes the wheelchair suitable for both indoor and outdoor use. It is allowed to use the wheelchair in different weather conditions. It can be used at temperatures of -25 degrees up to maximum 55 degrees Celsius. It however must be noticed, that metal or plastic surfaces of the wheelchair can become very hot when exposed to direct sun for longer time. Because of the harmful combination of salt water and sand it is advised not to use the wheelchair on beaches. We advise to clean the wheelchair after having been in contact with sand and/or salt water as described in the paragraph “cleaning”.

9. Tyre pressure

The EVO Lectus uses air-filled front tyres and solid or air-filled tyres in the rear. The choice of having solid or air-filled rear tyres is made by the user during the ordering of the wheelchair. In order to prevent tyre damage and to preserve the performance of the wheelchair, the tyre pressure must be checked at least on a monthly basis. The tyre pressure should be:

Large front air-filled tyres	**: max. 300 Kpa / 43.5 PSI / 3 bar**
Small rear air-filled tyres	**: max. 200 Kpa / 29.0 PSI / 2 bar**

10. The wheelchair

10.1. Chassis

The chassis is the base of the wheelchair. It contains wheels, drive motors, batteries, electronics and seat lift. The steel parts of the chassis are electrolytic anodized, and powder coated to ensure a long life without corrosion.

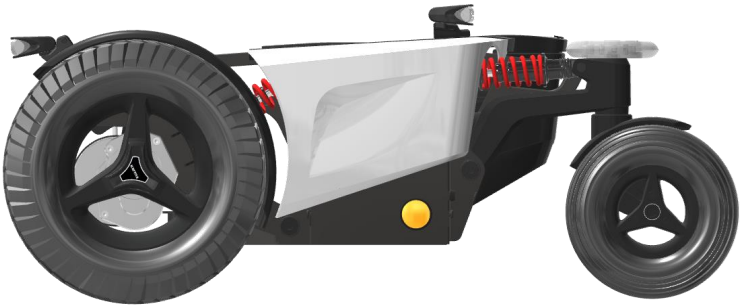

Each of the front wheels is propelled by a powerful drive motor. These motors also take care for the steering of the wheelchair. With this system it is possible to turn on the spot. This makes the wheelchair optimal for indoor use.

10.1.1 Chassis suspension

The chassis has independent suspension on each of the four wheels. The stiffness can be adjusted to your personal requirements.

Front suspension

Rear suspension

10.1.2 Transport fixation loops

Fixation loops in the front

Fixation loops in the rear

The fixation loops are marked with this sign:
Further information about transportation of the wheelchair you will find in chapter "transportation".

10.1.3 Lights and reflectors

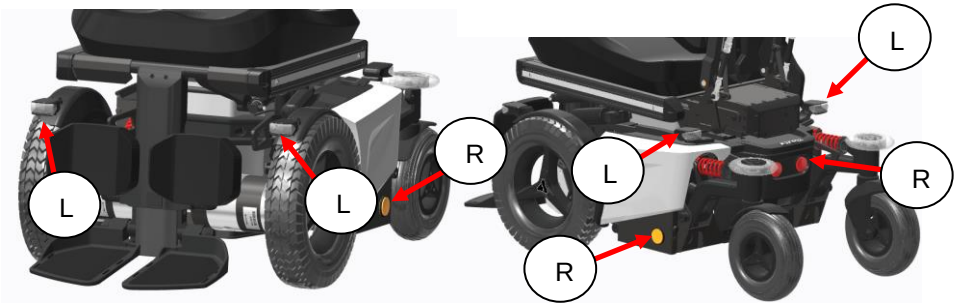

The chassis has very strong and bright LED lights to make sure you can have a safe drive in the dark. The orange reflectors on both sides and the red reflectors on the rear also make you visible for other people as well. The lights fulfill the European requirements. (E marked)
The additional LED indicators give our environment clear information in which direction you want to go.

10.1.4 Battery compartments

The batteries are mounted as low as possible and as central as possible into the chassis to provide an optimal centre point of gravity. This results in a maximum stability of the wheelchair. The compartment can hold maintenance free batteries up to 85Ah. For the specification of the batteries see the chapter technical specifications.

The maintenance free batteries can be reached from the side. They can be replaced whilst the user is still in the wheelchair.

The battery box

To reach the batteries, first remove the locking bolt [A]. Lift up the plastic cover vertically [B], then pull it off the chassis in the horizontal direction. [C].

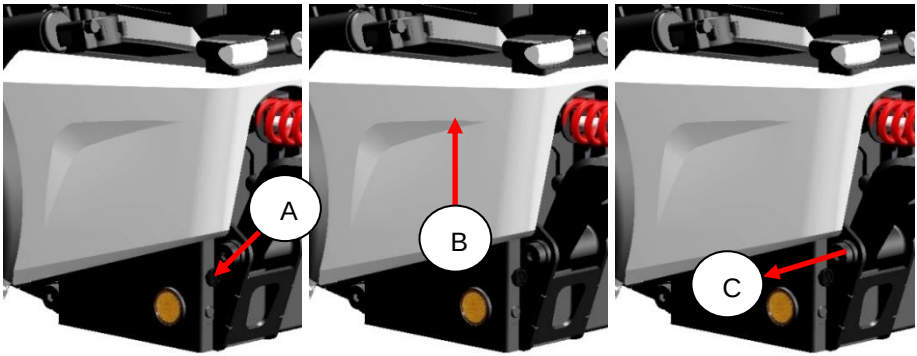

After taking the cover off, the maintenance-free battery can be pulled out of the box. Mind the cables!

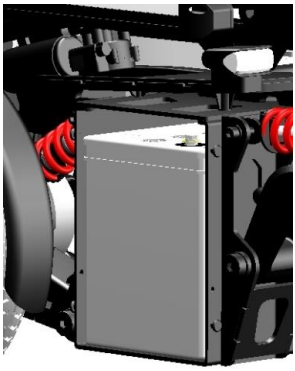

At installing the maintenance-free battery, one should pay great attention to make sure the cables are not jammed between the battery and the battery box.

⚠ CAUTION

When pulling the battery out of the box do mind to not overstretch the cables. This might lead to technical failure.

⚠ CAUTION

Before removing the batteries, first remove the main fuse. This is to reduce the risk of short circuit or electrical shock. See the chapter of the main fuse

⚠ CAUTION

Before reconnecting the battery, read the wiring instructions on the inside of the battery cover.

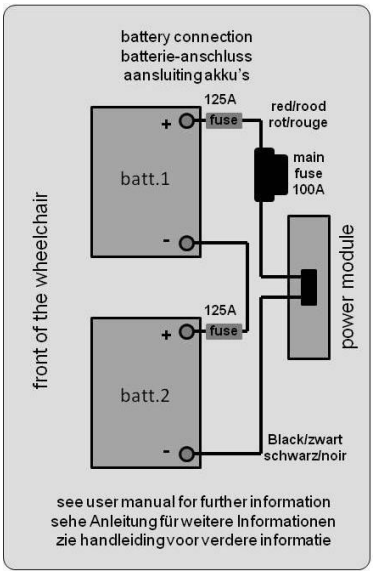

10.1.5 Main fuse

The chassis contains a main fuse which is located at the rear of the chassis.

Position main fuse

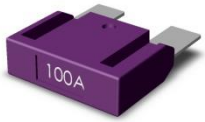

Main fuse

The main fuse protects the whole electrical system of the wheelchair. This fuse will only blow if there is a serious problem on the wheelchair.

⚠ CAUTION

If the main fuse has blown, do not replace the fuse immediately. First contact your local supplier to have the wheelchair checked.

The fuse also works as a main switch. By removing the main fuss, the batteries are disconnected. This is important when the wheelchair is transported in an airplane. To remove the fuse, simply pull the plastic cover off and pull the fuse.

⚠ CAUTION

Only use original main fuses as replacement. Using other fuses might lead to material damage to the wheelchair.

10.1.6 Seat lift (option)

The seat lift is centrally mounted into the chassis. With this lift the seat can be raised step less up to 400mm. This enables the user to have more freedom of movement, not only in horizontal area, but also in the vertical area. The seat lift can be stopped at any height and will be automatically locked in position.

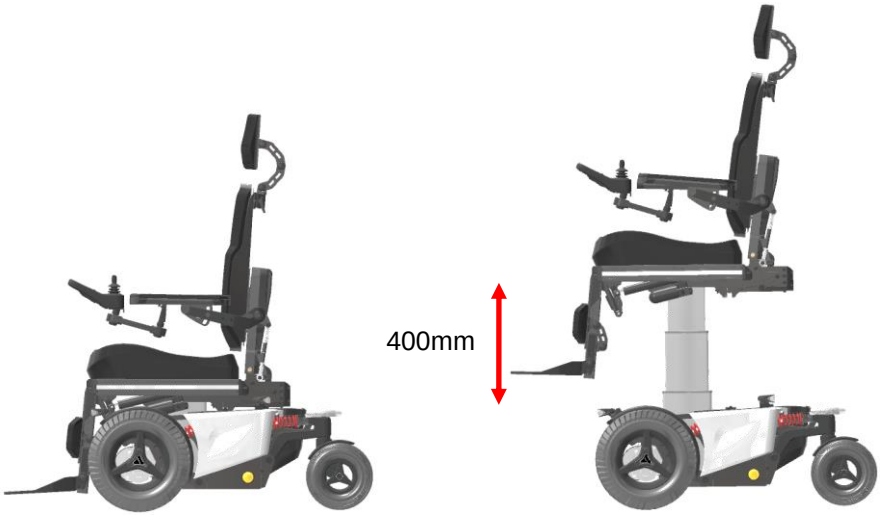

Whilst lifting the seat, the driving speed will be automatically reduced to gain maximum stability at all times. At high seating position also the seat tilt will be blocked to gain maximum stability. The seat height can be set to every height position by the user. The maximum seat height is set to 850 mm (seat pan to ground)

CAUTION

Be careful driving in high seating position at slopes. We strongly suggest to only use the seat lift on flat areas. Lifting high on a steep slope might lead to instability and might cause personal or material damage.

NOTE

The seat lift can also be very helpful for transferring or lifting the user in or out of the wheelchair.

10.2 Seat

The seating system is designed to optimize the seating comfort to the user. It can be adjusted in seat depth and seat width. A rail on each side provide mounting point for accessories like hip supports or safety belts. The seat pan is flat so other seating cushion can be fitted on to the seat as well.

10.2.1 Upholstered seat cushion

The upholstered seat cushion is available in different sizes to provide optimal seating comfort and support to the user. The cloth is available as 3D mesh or breathing but waterproof cloth. The seat cushion is well fixed with Velcro on to the seat pan to prevent it from sliding.

NOTE

Using other cushions with different thickness might influence the biomechanical function of the legrest and or backrest.

10.2.2 Seat rail

On each side of the seat frame there is a rail to mount different accessories to the wheelchair. The middle area can be personalized with a color sticker.

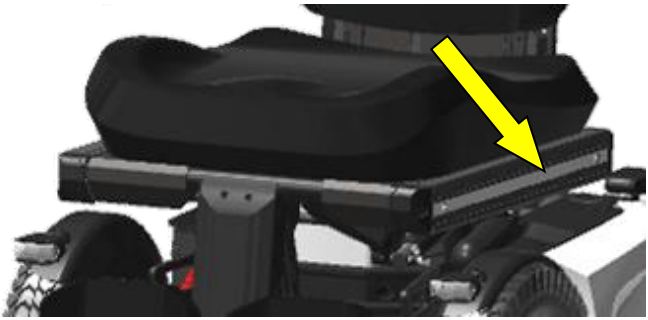

Seat rail

10.2.3 Seat tilt (option)

The seat tilt can be used to release pressure. The tilting angle is from 0 to 50°. The tilt can also be used when driving down a slope for compensating the negative seat angle. This provides a more stable seat position and safe driving.

If the tilt is activated over a certain angle, the driving speed will be reduced. This is to reduce the risk of danger whilst driving at high speed.

⚠ CAUTION

Always drive carefully on slopes. The angle of the slope has great influence on the total stability of the wheelchair.

⚠ CAUTION

When tilting always check if there are no obstructions close to the wheelchair. Especially in the front or rear of the wheelchair.

⚠ CAUTION

When tilting, the wheelchair will get longer. This has influence on the driving characteristics of the wheelchair. Make sure there is enough space to drive.

10.2.4 Upholstered backrest

The upholstered backrest is available in different lengths and width sizes to give the users maximum support and comfort. The cloth is available as 3D mesh or breathing but waterproof cloth.

10.2.5 Power recline backrest (option)

The power recline backrest can be set from 85° to a flat horizontal position. It gives the user the possibility to move into a laying position or a very active sitting position.

At a reclined backrest position over 135° the driving speed will be automatically reduced for safety reasons.

⚠ CAUTION

When reclining always check if there are no obstructions close to the wheelchair. Especially in the rear of the wheelchair.

⚠ CAUTION

When reclining, the wheelchair will get longer. This has influence on the driving characteristics of the wheelchair. Make sure there is enough space to drive.

⚠ CAUTION

Always drive carefully on slopes. The angle of the slope has great influence on the total stability of the wheelchair.

10.2.6 Upholstered armrest

The upholstered armrests of the seat provide good and comfortable support of the arm which result in a stable seating position. The armrest has a soft upholstery on the top side. The arm rests come in 320 mm or 400mm length.

A biomechanical mechanism makes sure the armrests are always in a good position to supply optimal support. The armrests are adjustable in height, depth, and angle and inside angle. For transferring in and out of the chair, the armrests can be flipped up.

10.2.7 Legrest

The legrest uses a central mounted tube on which the footplates are mounted. The footplates come in two different sizes. The legrest can be adjusted in length (left and right footplate independent) knee angle and footplate angle (left and right independent). The footplates can be flipped up to decrease the size of the wheelchair for transportation or storage. A built-in rail can be used to mount calf supports.

10.2.8 Powered legrest adjustment (option)

With a powered legrest the knee angle can be set from little less than 90° up to a fully stretched leg angle. The biomechanical mechanism ensures the lower leg length will always be the same.

If the legrest is stretched over 45° the driving speed will automatically be reduced for safety reasons.

⚠ CAUTION

When stretching the legrest always check if there are no obstructions close to the wheelchair. Especially in the front of the wheelchair.

⚠ CAUTION

When stretching the legrest, the wheelchair will get longer. This has influence on the driving characteristics of the wheelchair. Make sure there is enough space to drive.

10.2.9 Upholstered headrest (accessory)

The upholstered headrest is adjustable in height, depth and angle to the requirements of the user. It can be taken off without losing its settings. As an additional option, a rail can be mounted to move the headrest out of center. Another option is a rotation block to rotate the headrest to the left or right.

ⓘ NOTE

If the wheelchair user is transported in a taxi van we strongly advice to use the headrest. This is in order to provide you optimal stability whilst driving in the taxi.

10.2.10 Upholstered calf support (accessory)

The upholstered calf supports are adjustable in height, depth, width and angle. They give additional support when using a powered legrest.

10.2.11 Upholstered lateral support (accessory)

The optional upholstered lateral support offer support on the upper body. The supports are adjustable in height, width, depth and angle. The supports can also be flipped sideways for transferring in or out of the wheelchair. During this sideways flipping the adjustments stay intact. The soft rounded pads ensure optimal support and great comfort.

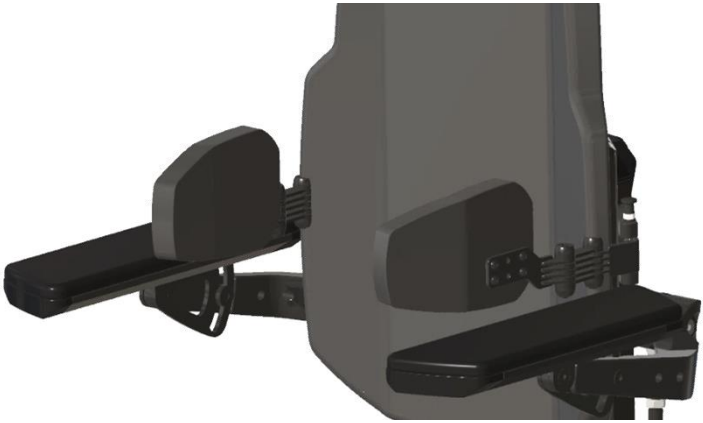

Upholstered lateral supports

10.2.12 Upholstered hip support (accessory)

The upholstered hip supports offer side support to your hips or upper leg. The support is adjustable in height, depth, width and angle. The soft pads offer good and comfortable support.

Upholstered hip supports

The hip supports can be taken away for transferring in or out of the wheelchair, without losing the settings.

10.2.13 Positioning belt

For positioning, several types of belts are available.

belt (option)

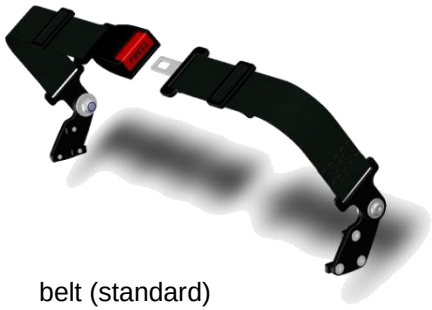

belt (standard)

NOTE

Positioning belts shall not be used as a car safety belt. If transported in a car, the user needs to wear an additional car safety belt.

10.3 The controls

10.3.1 Side steering control

side steering, fixed bracket

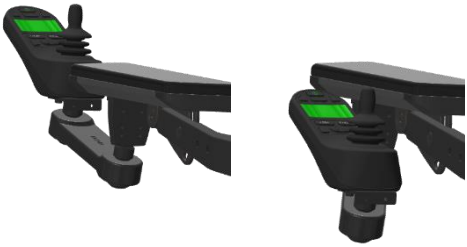

side steering, swing away (option)

The EVO Lectus wheelchair has a side steering control unit, which is either mounted on the left- or right armrest. The joystick module can be mounted on a fixed bracket or on an (optional) swing away mechanism. This system enables you to sit close to a table.

10.3.2 Tray table control / Desktop control (option)

Desktop control, driving position

Desktop control, flipped up

The desktop control enables the user to have a table with a center mounted build-in joystick module. The table can be flipped up sideways for transferring in and out of the wheelchair. The joystick module can be flipped up to use the table as desktop. When flipped up, the driving mode of the wheelchair is automatically blocked. This ensures a safe use of the wheelchair in any position.

10.3.3 Attendant control (accessory)

Attendant control

The attendant control enables the user to have a handle with a build-in joystick module. The attendant control can be arranged on the left or right side of the back plate.

10.4 Other optional accessories

Item	Figure	Introduction
Center Mount One-piece Footplate	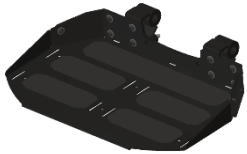	To provide a lower footplate with respect to the ground and to provide a comprehensive support plane with the support weight up to 136kg.
Armrest support		Could be arranged on the armrest to support the weight up to 136kg on single side.
Tray table General		To provide a desktop for user when head or leg controller is used.
Bumper wheels		To prevent collision of the case and rear wheels when moving backward.
Warning light		To provide the waring and direction light in front and back.

⚠ CAUTION

The arrangement of the options / accessories should take the motion of wheel and cables into consideration, it is suggested to set up those options / accessories by an authorized Karma supplier.

11. The first set up

Before using, the wheelchair needs to be adjusted and set up for the user. In this chapter we will explain all the setup which needs to be done before the first drive.

⚠ CAUTION

Before using the wheelchair, it is vital to make the right set up for the user. A non-proper set up of the wheelchair might lead to uncontrolled driving which can result in personal or material damage.

11.1 Chassis suspension

The suspension of a chassis has been designed to increase the comfort whilst driving. Also climbing steps will be easier having suspension on the chassis. But suspension can also be a disadvantage. A suspension which is set to soft has a negative influence on the control of the wheelchair. So it is very important to have a good mix.

11.1.1 Spring setting

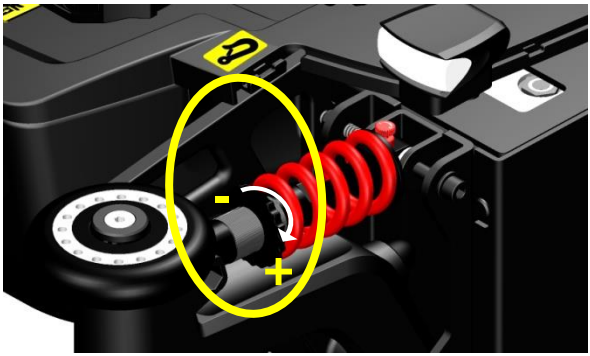

The strength of the spring will be set by turning the ring shown above. By turning it to the right (clockwise) the spring will have more tension and the chassis becomes more stiff. This increases the mechanical traction and improves control. The stiffness of the suspension depends on the user weight. The settings need to be done by setting and testing. We advise you to start with a more stiff setting, since this results in the best control. If the suspension is too hard, you can set it softer by turning the ring more counter clockwise. To make sure the balance of the left and right spring is the same, we need to measure the setting.

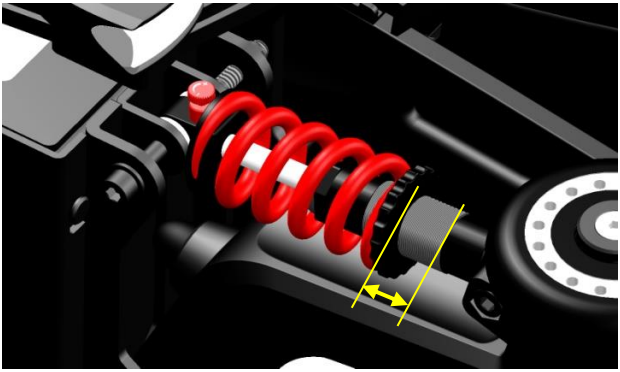

The best way is to measure the distance between the ring and the end of the tread in mm. Make sure that the spring settings in the front are identical. The same for the two rear springs.

CAUTION

To soft settings of the spring will result in a very spongy behavior of the chassis. The control of the wheelchair will be bad. Avoid soft settings.

CAUTION

If the springs are uneven set, it might lead to strange driving behavior of the wheelchair. This might result in personal or material damage.

NOTE

After setting the suspension, always drive first slowly and in an open space to test the result of the setting.

11.1.2 Damper setting

The spring damper unit has a red adjustment wheel on the end of the damper. This wheel adjusts the rebound speed of the spring.

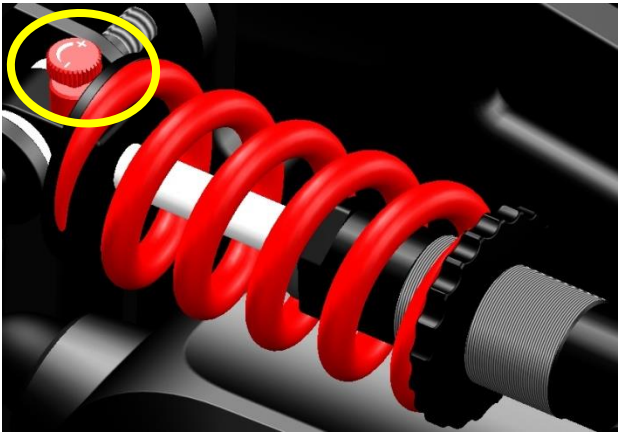

Turning the red knob clockwise (to the + direction) will reduce the movement of the piston going out again. This increases the damping of the spring damper unit. Turning the knob counter clock wise will reduce the damping. The right setting will be done by stetting and testing whilst driving.

⚠ CAUTION

To soft settings of the damper will result in a very spongy behavior of the chassis. The control of the wheelchair will be bad. Avoid soft settings.

⚠ CAUTION

If the dampers are uneven set, it might lead to strange driving behavior of the wheelchair. This might result in personal or material damage.

ⓘ NOTE

After setting the suspension, always drive first slowly and in an open space to test the result of the setting.

11.2 Seat adjustments

Before using the wheelchair, the seat must be set to the right size for the user. Most of the time this will be done by your local supplier, together with your therapist. A well-adjusted seat will give you optimum support and comfort.

11.2.1 Seat depth

To adjust the seat depth, we have to do the following steps:

step 1: pull off the seat cushion.

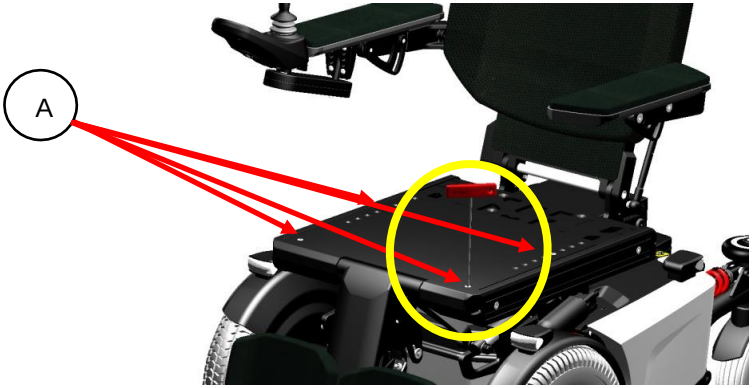

step 2: loosen the top seat panel screws (A) using an 3mm Allan key.

step 3: take off the top seat panel.

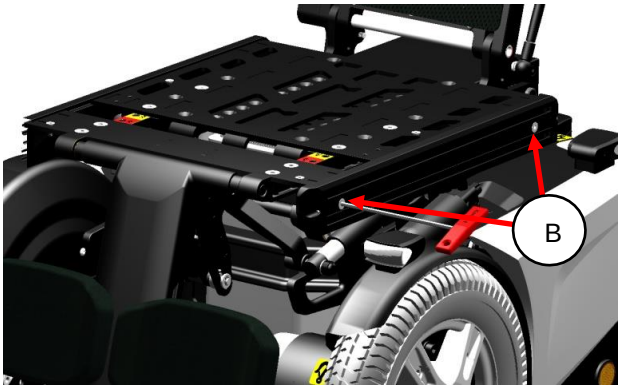

step 4: loosen up the screws (B) of the side rails, using an Allan key size 4mm.

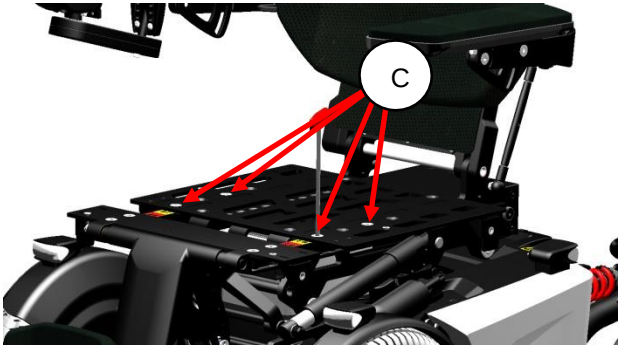

step 5: loosen up the screws (C) of the legrest unit, using an 5mm Allan key.

step 6: move the legrest frame forward to increase the seat depth or backwards to reduce the seat depth.

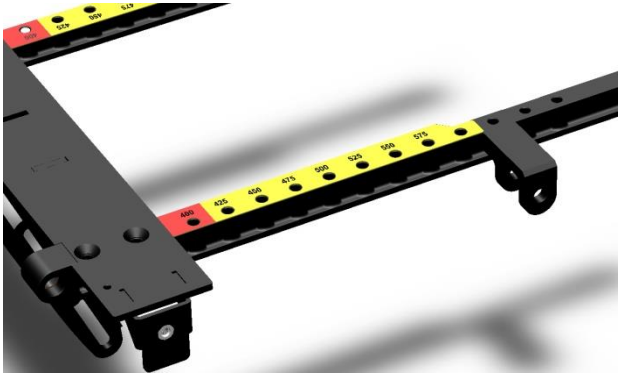

The seat depth is adjustable in steps of 25 mm, starting at a seat depth of 400mm

CAUTION

The minimum seat depth of 400 mm must be set with extra attention. This is to avoid seat parts colliding with the seat lift.

NOTE

The setting of the seat depth requires some expertise. Therefore we strongly advise you to have it done by your local authorized Karma dealer.

step 7: tighten the screws of the legrest frame to fixate the seat depth.

step 8: mount the side rails into position and tighten the bolts.

NOTE

With every seat depth comes a different length of seat rail. Pre-order the right length of rail first before changing the seat depth.

step 9: place the top seat panel back into position and tighten the screws.

Now, the seat cushion can be put back in to place.

11.2.2 Seat width

To increase the seat width, additional extension rail can be mounted. Please notice the following steps to increase the seat width:

step 1: take off the cushion

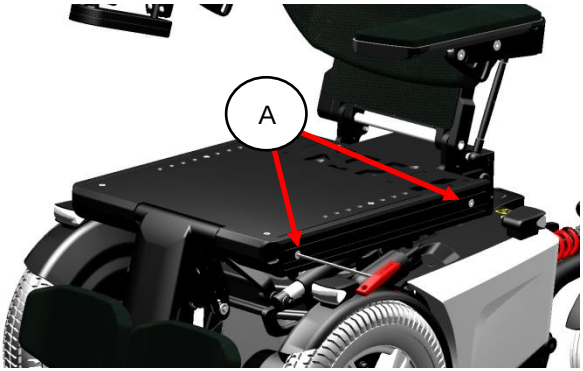

step 2: loosen the screws of the side rail (A) and remove them.

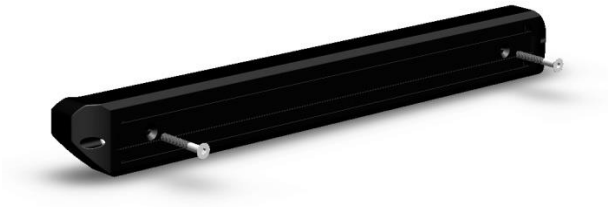

step 3: unpack the additional extension rail

step 4: place the extension rail in to position and place the longer mounting bolt which come with the extension rail.

step 5: tighten the bolts and place the wider seat cushion on the set pan.

11.2.3 Armrest width

The distance between both armrests can be changed in steps by 50mm. To change the distance you must do the following steps:

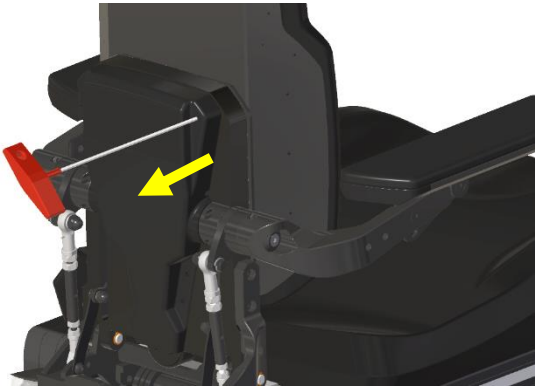

step 1: remove the rear cover of the backrest. To do this you must use a 3mm Allan key to loosen the 6 small screws.

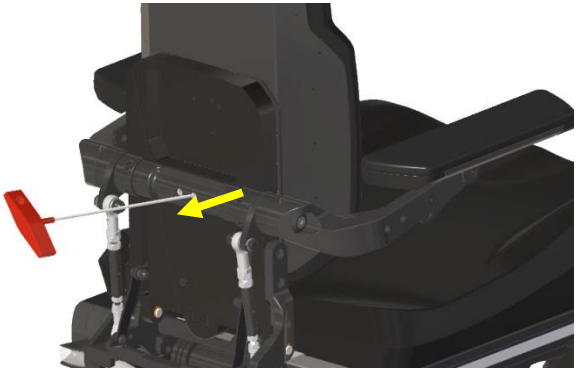

step 2: loosen and remove the two bolts using an 5mm Allan key.

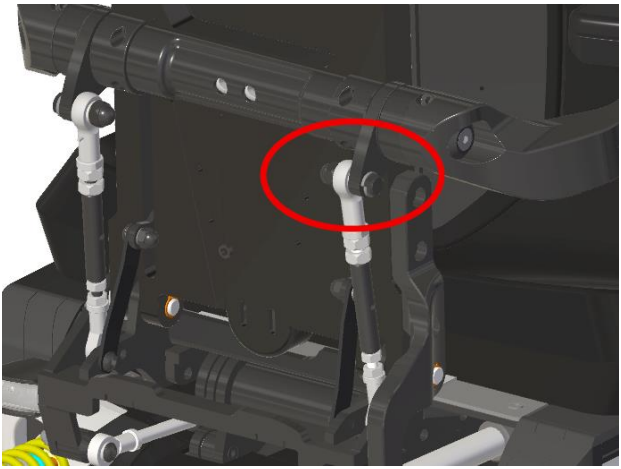

step 3: remove the bolts and detach the parallel bar from the armrest.

⚠ CAUTION

If the parallel bar is removed the armrest will fall down. So before removing the parallel bar, make sure you hold the armrest with one hand whilst removing the parallel bar with the other hand.

step 4: pull out the armrest axle

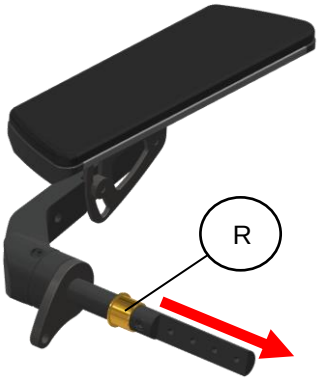

step 5: take of the bearing ring (R)

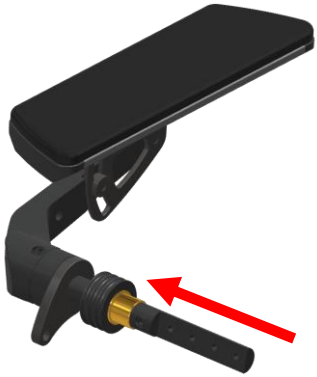

step 6: add or remove the spacer of the axle and put the bearing back.

step 7: put the axles back into the backrest frame and tighten the two central bolts.

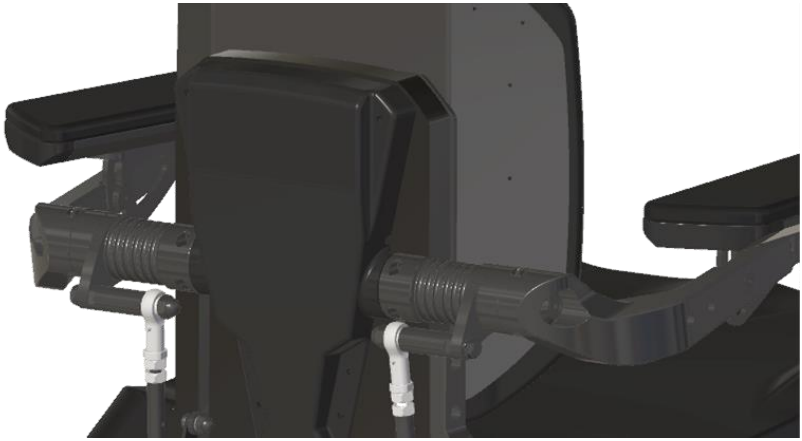

step 8: connect both parallel bars and secure them with the locking pin.

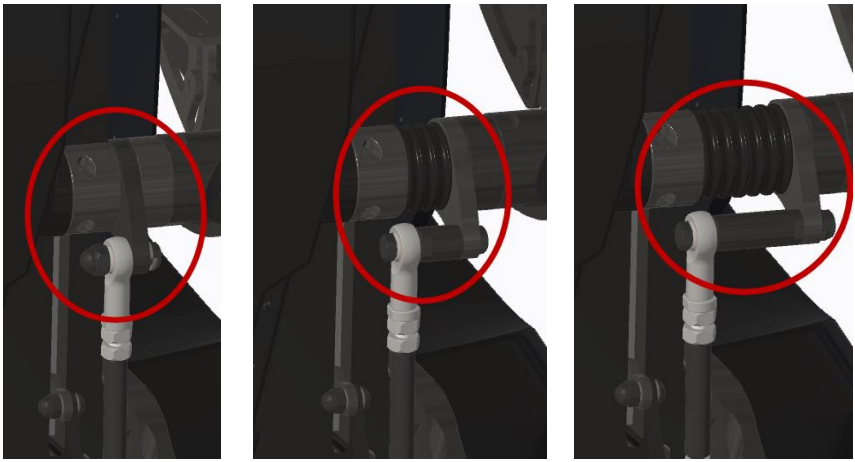

step 9: put the backrest cover back on the frame.

Now the armrests are set in to a different width position.

11.2.4 Armrest height

The armrest height can be adjusted up and down independently. To set the right armrest height, follow the next steps:

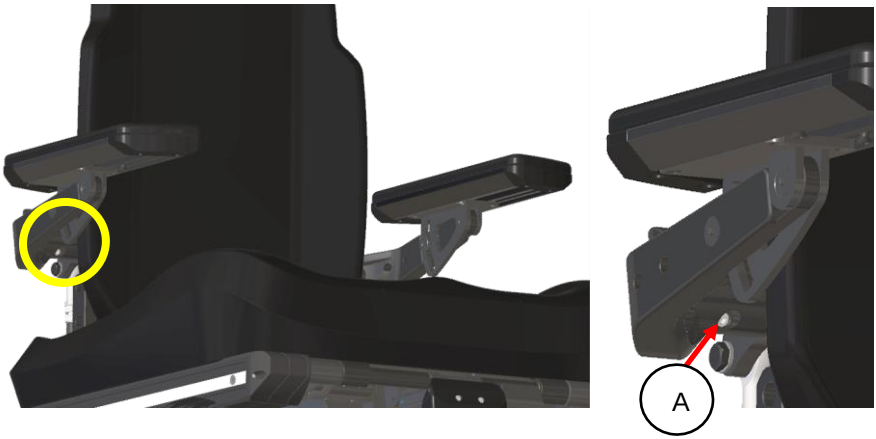

step 1: release the locking bolts (A) on each side of the armrest using an Allan key size 5mm.

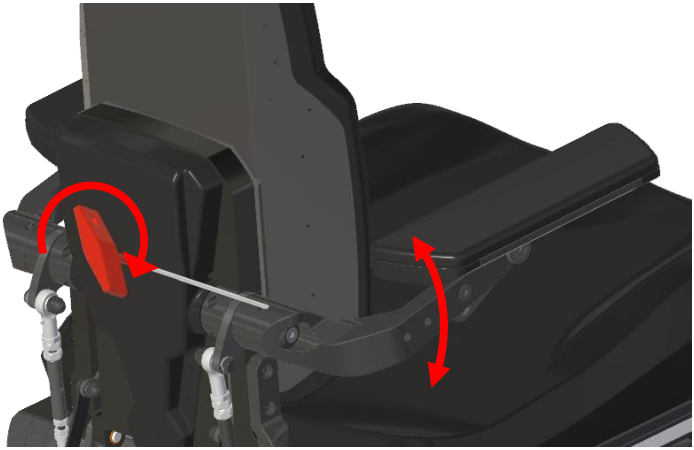

step 2: set the armrest angle by using an 5mm Allan key. By rotating it clockwise the armrest height will increase. By rotating it counterclockwise the armrest height will be reduced.

step 3: once the right height is set, fixate this position by tightening the locking bolts again.

11.2.5 Armrest angle

To set the right armrest angle please take the following steps:

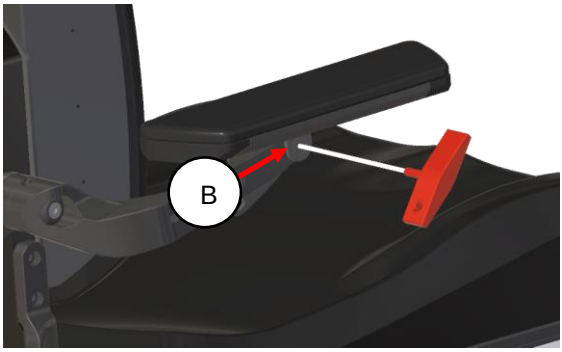

step 1: loosen the front armrest bolt (B) using a 5mm Allan key. Don't take it out, just loosening.

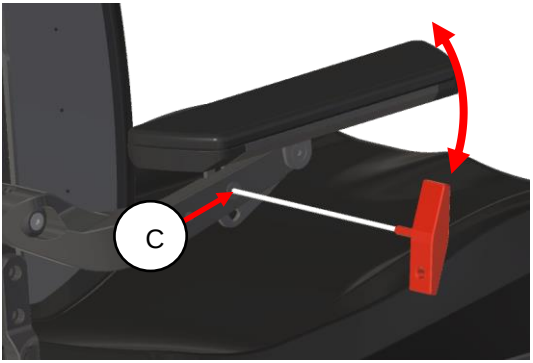

step 2: loosen up the bolt (C) slightly until the armrest starts to move.

⚠ CAUTION

If the second bolt is loosened the armrest will fall down. So loosening the second bolt, make sure you hold the armrest with one hand whilst loosening the bolt with the other hand.

step 3: once the right armrest angle is set, first tighten the bolt (C) and then the bolt (B).

11.2.6 Armrest depth

The armrest can be step less adjusted in depth. To set the right armrest depth follow the next steps:

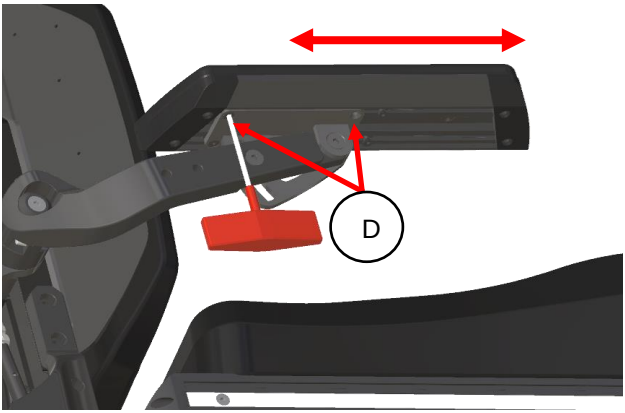

step 1: loosen up the four bolts (D) using a 3mm Allan key.

step 2: slide the armrest backward ort forwards into the required position.

step 3: tighten the four bolts. The armrest is set.

11.2.7 Armrest inside angle

The armrest pad can be sideways adjusted over an angle of 15 degrees.
To set the armrest inside angle take the following steps:

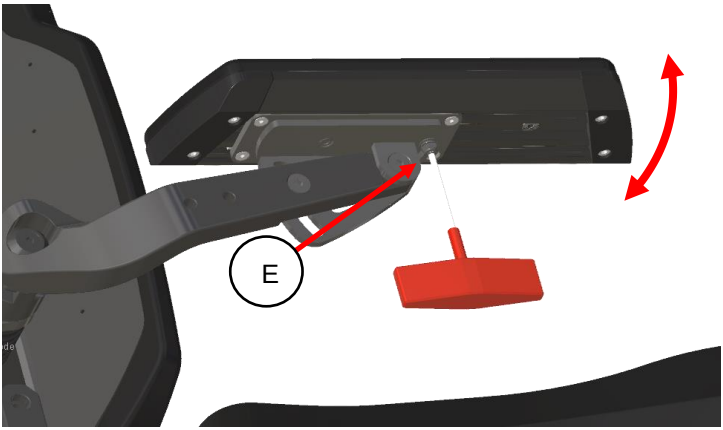

step 1: loosen up nut (E) underneath the armrest pad using a 10mm wrench head.

step 2: turn the armrest in the required aside angle.

step 3: tighten the nut again. Now the angle is set.

⚠ CAUTION

Always make sure the nut is correctly tightened. Especially on the armrest where the joystick module is mounted. If the armrest is not fixed, it might move whilst driving the wheelchair. This might lead to dangerous situations.

11.2.8 Legrest length

The legrest length is step less adjustable. Both left and right length is separately adjustable. To set the right length follow the next steps:

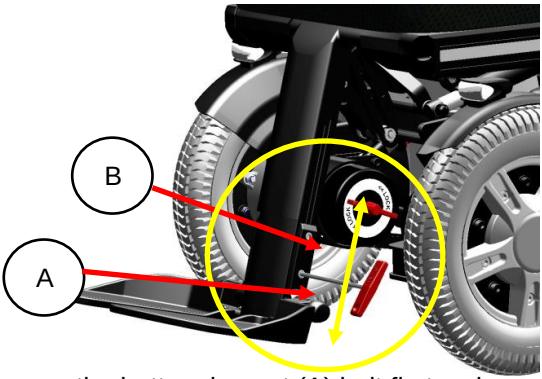

step 1: loosen up the bottom legrest (A) bolt first, using a 5mm Allan key.
step 2: slowly loosen up the top end bolt (B). Just enough to feel the footplate is starting to move.

⚠ CAUTION

By loosening the second bolt on the footplate, the footplate might suddenly start to slide down. If the user has his or her foot on the footplate, this sudden movement might cause a shock reaction.
It is best to hold the footplate with one hand and loosen the bolt with the other hand.

⚠ CAUTION

User should be aware of the collision when footplates are set in low or high position. A very low/high footplate should cooperate with specific settings especially when standing function is used. Before adjusting the footplate, please contact authorized supplier.

step 3: now slide the footplate into the required position.

ⓘ NOTE

Make sure the legrest is in the right position. The surface pressure on the upper leg part should be equally divided over the total length. A too short or too long adjusted length might lead to pressure points on the upper legs part.

step 4: if the right length is set, tighten bolts firmly.

11.2.9 Legrest angle

The legrest angle can be mechanically set following the next steps:

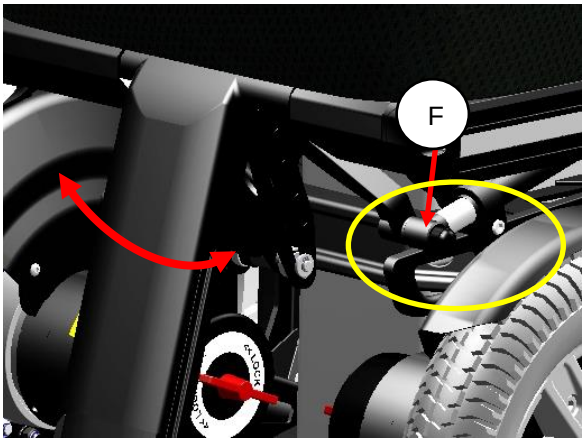

step 1: loosen up the bolt (F) on the telescopic tube of the legrest using a 5mm Allan key. Just open it far enough so you feel it is starting to move.

⚠ CAUTION

By loosening the bolt of the telescopic tube, the legrest might suddenly start to move down. If the user has his or her feet on the legrest, this sudden movement might cause an shock reaction.
It is best to hold the legrest with one hand and loosen the bolt with the other hand.

step 2: move the legrest into the required angle.

step 3: tighten the bolt so the setting is fixed.

The legrest angle can optionally be power adjusted. How to control the powered legrest is explained in chapter 16.

11.2.10 Footplate angle

The footplate angle can be adjusted for the left and right footplate separately. The setting is step less. To adjust the angle follow the next steps:

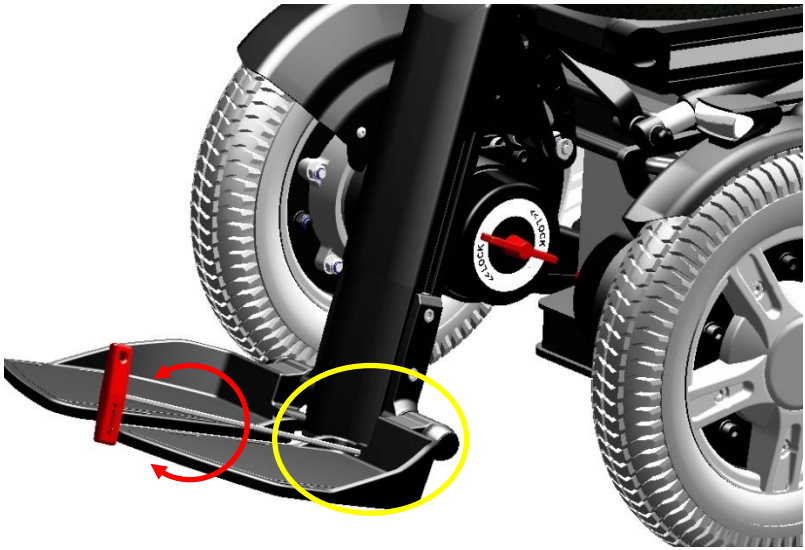

step 1: insert the 4mm Allan key into the adjustment screw inside the footplate.

step 2: turn the Allan clock wise to decrease the angle between footplate and legrest. Turn the Allan key counter clock wise to increase the angle.

NOTE

The adjustment screw is added with some lock tite to prevent it from moving by itself. For that reason the turning might a little heavier than expected.

11.2.11 Calf support settings

Optionally, calf supports can be mounted on the legrest. The calf supports are fully step less adjustable.

11.2.11.1 Adjusting the height of the calf support

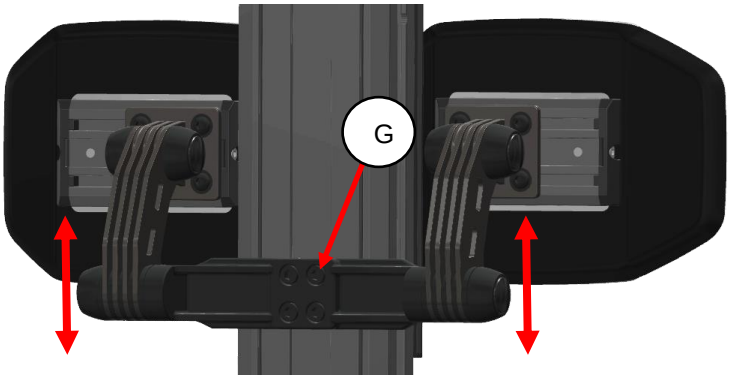

step 1: loosen up the four bolts (G) using a 5mm Allan key, until the calf support starts to slide in the rail.

step 2: slide the calf support into the required height position and fasten the four bolts.

11.2.11.2 Adjusting the width of the calf supports.

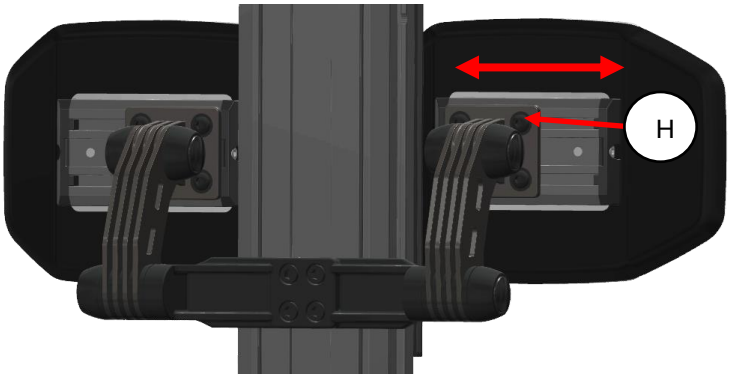

step 1: loosen up the four bolts of the calf support pad, using a 5mm Allan Key.

step 2: slide the pad into the right position on the rail.

step 3: tighten the four bolt. Repeat the same for the other calf support pad.

11.2.11.3 Adjusting the depth and angle of the calf support pads.

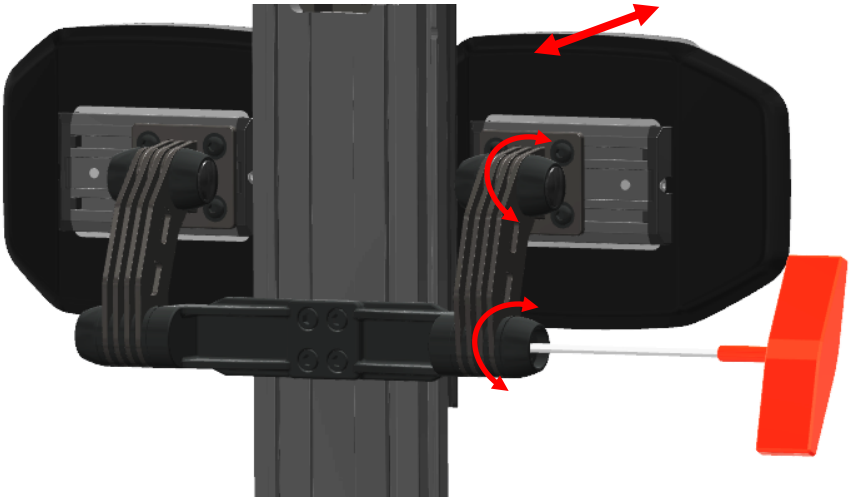

step 1: remove the two covers on each side of the calf support.

step 2: loosen up the bolts of the friction setting, using a 6mm Allan key.

step 3: now push the calf support pad in the right depth and angle setting.

step 4: tighten the bolts again to fixate the position.

step 5: place the covers back onto the friction end caps.

11.2.12 Headrest settings

The optional head rest is fully step less adjustable to suit the user's needs. It can be taken off without losing its setting.

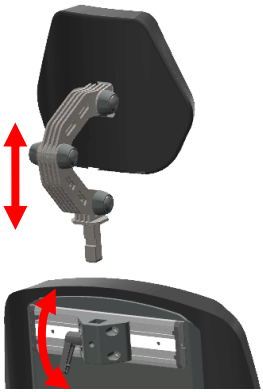

Detached from backrest

High position

Low position

11.2.12.1 Sideways adjustment headrest

The head rest has an optional rail for a sideways off center adjustment. to set this adjustment, take the following steps:

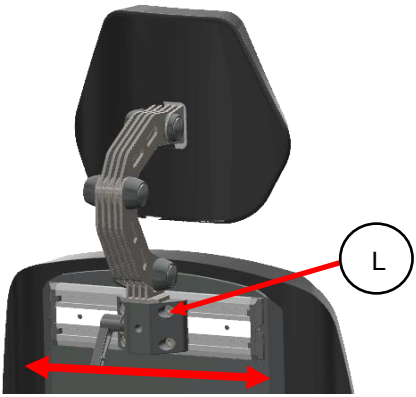

step 1: loosen the 4 bolts (L) using a 5mm Allan key.

step 2: move the headrest along the rail into the required position.

step 3: tighten the bolts again to fixate the position.

11.2.12.2 Headrest depth, height and angle adjustment.

The headrest has a friction system containing three rotation joints. By moving each rotation joint you can set the height, depth and angle of the headrest all at the same time. To set the headrest in its right position, follow the next steps:

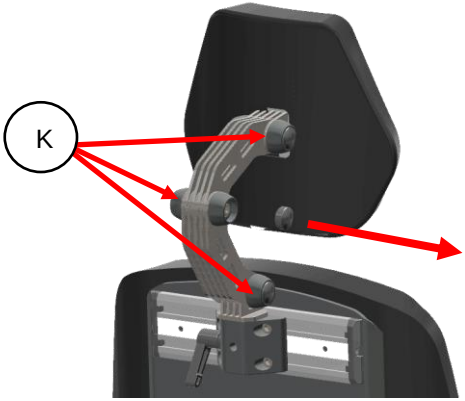

step 1: take off the rubber covers (K) of the three joints

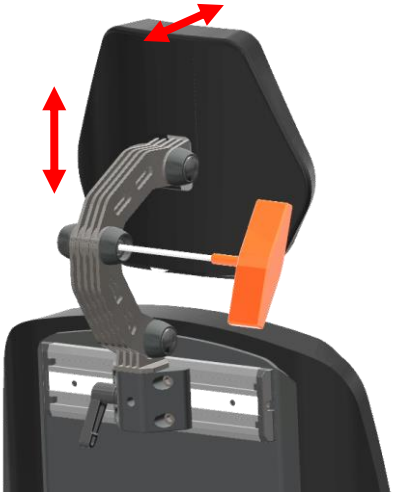

step 2: loosen up the bolts using a 6mm Allan key. Loosen then up until the headrest can be moved.

step 3. push the headrest into the required position.

step 4: tighten the bolts firmly so the position is fixed.

step5: put the rubber covers back on the joints.

⚠ CAUTION

If you loosen up the bolts too much, the headrest will fall down. This might cause a little shock reaction on the user in the wheelchair. It is better to loosen the bolts bit by bit and every time try to move the headrest. The friction will keep it stabile. Make sure you hold the headrest with one hand and loosen the bolt with the other hand.

11.2.13 Hip support settings

The optional hip supports are fully step less adjustable in side position, height, depth and angle. The can easily be take of the chair using a quick release system, without its settings.

11.2.13.1 Set the side position on the seat rail

To set the position on the seat rail, take the following steps:

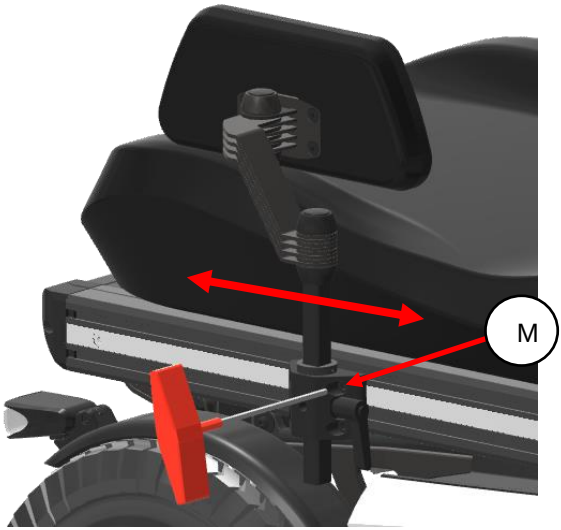

step 1: loosen the four bolts (M) using a 5mm Allan Key.

step 2: move the hip support in to the required position.

step 3: tighten the four bolts, the setting is now fixed.

11.2.13.2 Setting the height, width and angle of the hip support

To set the height of the hip support, take the following steps:

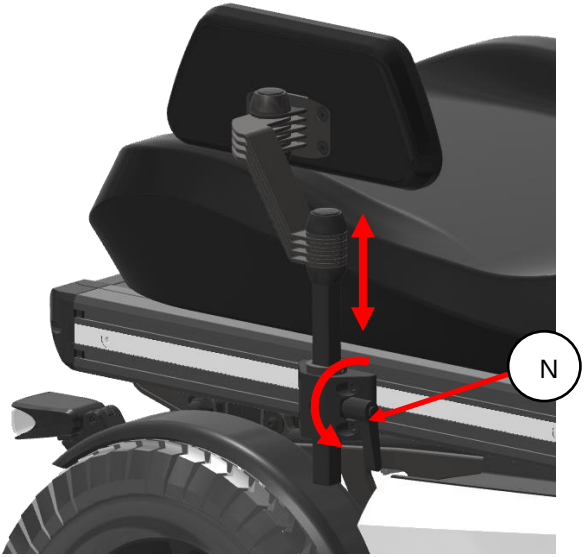

step 1: loosen the lever knob (N) and lift up the hip support into the right height position.

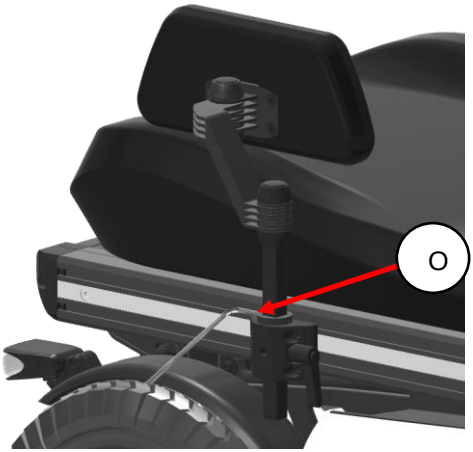

step 2: loosen the bolt (O) of the fixation ring using a 4mm Allan key and reposition this ring against the mounting block as a stopper.

step 3: tighten the nut of the fixation ring. Now the height is set and secured.

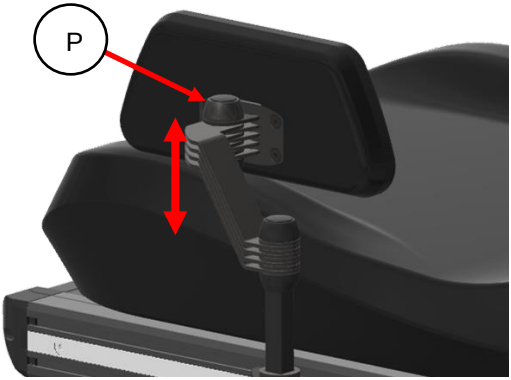

step 4: remove the rubber covers (P) of the friction joints.

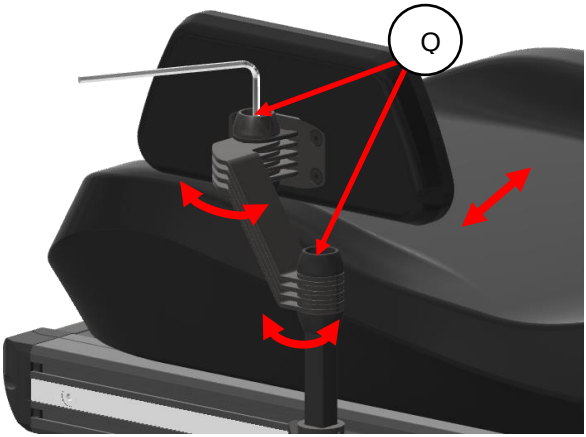

step 5: loosen the friction bolts (Q) so the padding can be moved.

step 6: tighten the frictions bolts. Now the position is fixed.

step 7: punt the covers back on to the friction joints.

⚠ CAUTION

If you loosen up the bolts too much, the hip support might start to suddenly move. This might cause a little shock reaction on the user in the wheelchair. It is better to loosen the bolts bit by bit and every time try to move the hip support pad. The friction will keep it stabile. Make sure you hold the hip support with one hand and loosen the bolt with the other hand.

11.2.14 Lateral support settings

The optional lateral support can be adjusted step less in height, depth, width and angle.

11.2.14.1 Set the height of the lateral support.

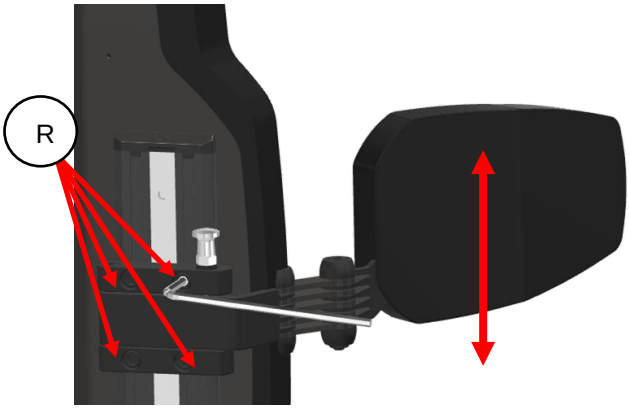

step 1: loosen up the bolts (R) using a 5mm Allan key.

step 2: move the lateral support in to the required height.

step 3: tighten the bolts.

11.2.14.2 Adjust the depth width and angle of the lateral support

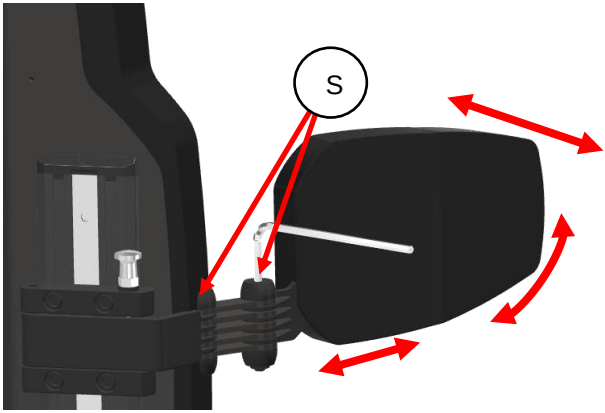

step 1: loosen the bolts (S) of the friction joints.

step 2: move the pad into the required angle, depth and width.

step 3: tighten the bolts to fixate the setting.

11.3 Positioning belts

The optional positioning belt can be adjusted in length and anchoring point. To change the setting simply follow the next steps:

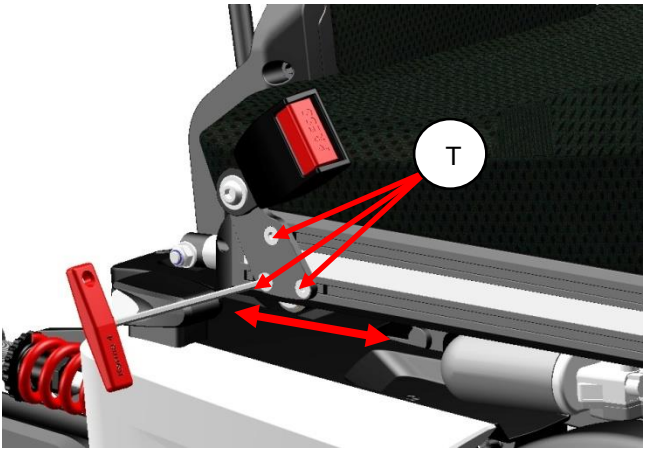

step 1: loosen the bolts (T) using a 4mm Allan key.

step2: move the bracket in the required position.

step3: fasten the bolts.

CAUTION

Make sure the brackets are tighten properly to avoid sliding of the seat belt along the seat rail. A sliding seat belt might result in poor seating position of the user.

NOTE

The positioning belt is not to be used as a safely belt. If the wheelchair is transported in an occupied position, the user needs to wear a safety belt which is mounted in the vehicle he or she is transported in.

11.4 Control settings

The side control joystick module is adjustable in depth, height and angle. to set the depth take the following steps:

11.4.1 Height adjustment side control:

To set the height adjustment of the side control follow the next steps:

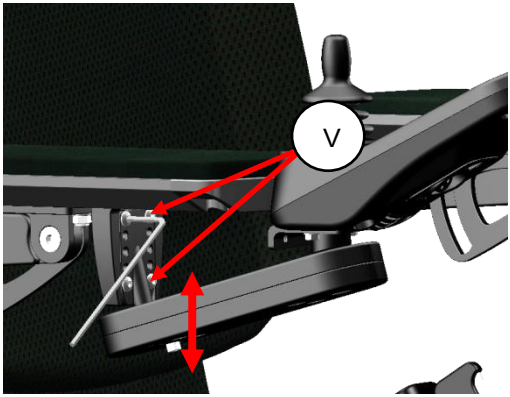

step 1: loosen the bolts (V) using a 3mm Allan key.

step 2: move the bracket into the required height position.

step 3: fasten the bolts again.

11.4.2 Depth adjustment side control

To set the depth adjustment of the side control follow the next steps:

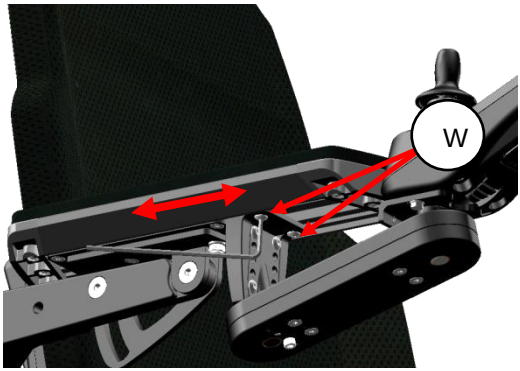

step 1: loosen the bolts (W) using a 3m Allan key.

step 2: move the control in the required depth position.

step 3: tighten the bolts again.

12 Control panel

The wheelchair uses a color screen joystick module. With this joystick module all functions of the wheelchair can be controlled. This joystick module can be mounted on the left or right armrest or even as an integrated desktop unit.

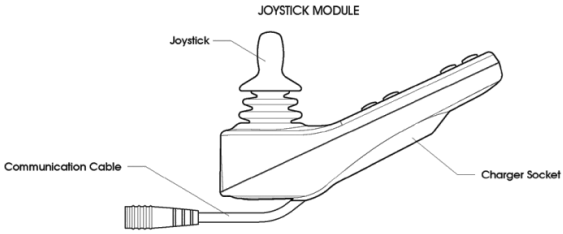

The joystick module contains a few major components which will be explained separately.

12.1 Charging socket

The charging socket is used to charge the batteries. Whilst charging the batteries, the driving of the wheelchair is automatically blocked.

12.2 Joystick

The primary function of the joystick is to control the speed and direction of the wheelchair. The further you push the joystick from the center position the faster the wheelchair will move. When you release the joystick the brakes are automatically applied. If the wheelchair is fitted with powered seat functions, the joystick can also be used to move and select the specific powered seat function.
Several different shapes of joystick knobs are available to optimize the control of the joystick.

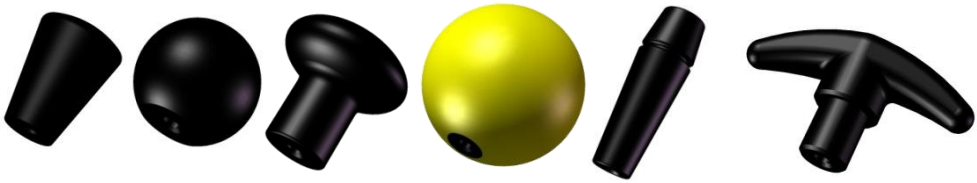

12.3 Display

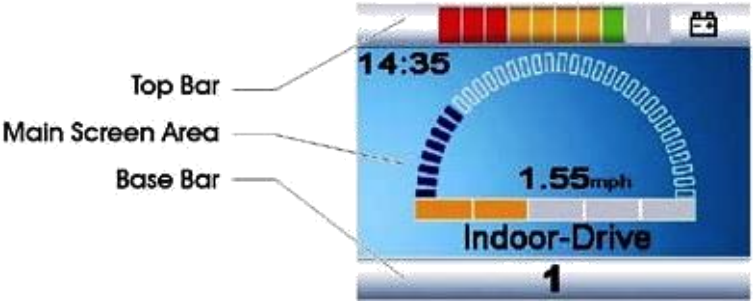

The color LCD screen is split into 3 areas of information. The Top Bar, the Base Bar and the Main Screen Area.

12.3.1 Battery indicator (top bar)

This displays the charge available in the battery and can be used to alert the user to the status of the battery. If all LED's are on, the batteries are fully charged. If the capacity is lowered one by one an LED will erase. The bar is divided into three color zones: Green, orange and red. If only the LED are left it means the batteries will be almost empty and need to be charged.
Beside the color you also have different LED lighting modes:

LED's Steady: This indicates that all is well.

LED's Flashing Slowly: The control system is functioning correctly, but you should charge the battery as soon as possible.

LED's Stepping Up: The wheelchair batteries are being charged. You will not be able to drive the wheelchair until the charger is disconnected and you have switched the control system off and on again.

12.3.2 Focus light (top bar)

When the wheelchair system contains more than one method of direct control, such as a secondary Joystick Module or a Dual Attendant Module, then the Module that has control of the wheelchair will display the In Focus symbol.

12.3.3 Profile name (main screen)

The profile name shows in which drive profile you are at the moment. The name of the profile can be programmed to your wishes by your local supplier. The wheelchair can have up to 8 different driving profiles. Each profile is set to a certain environment you want to drive in. Standard the wheelchair comes with an indoor- and outdoor profile.

12.3.4 Clock (main screen)

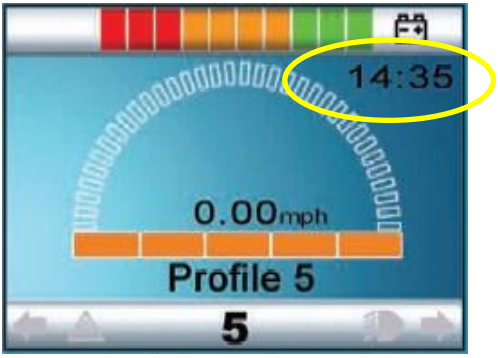

The clock displays the current time in a numeric format. The clock is user adjustable. Adjustable options are:

• Visibility, whether the clock is displayed on screen.
• The display format, 12 or 24 hour.
• The time, the user can adjust the time.

12.3.5 Speed display (main screen)

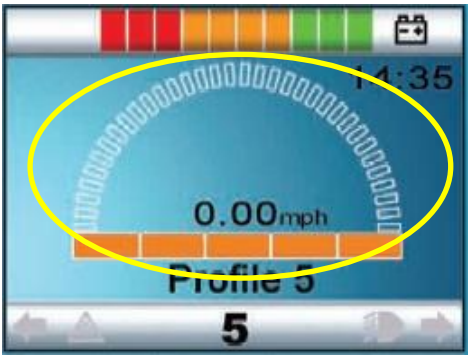

This gives a proportional display of the wheelchairs speed. The Arc begins at 0% and has a programmable maximum. The programmable parameter is Max Displayed Speed. The speeds can be set in mph or km/h. The standard setting km/h.

12.3.6 Speed bar (main screen)

This speed bar displays the current maximum speed setting. It contains 5 steps in speed. These steps can be selected using the speed buttons, explained in the chapter "Buttons"

12.3.7 Inhibit (main screen)

If the speed of the wheelchair is being limited; for example, by a raised seat, then this orange symbol will be displayed.

If the driving is stopped by an inhibit, the bunny will flash in red.

12.3.8 Set functions (main screen)

Displays the sections of the chair currently selected for movement, the name given to the selection and a direction arrow showing what sort of movement is available.

Besides the screen you use for driving or controlling the seat functions, there are also other screens which show information. The most common screen messages are explained in the next chapters.

12.3.9 Additional options (main screen)

Additional screens can show the additional options of the electronic system. For example: Bluetooth, environmental control, mouse function. For more detailed information about these options, please contact your local supplier.

12.3.10 Message screen (main screen)

The joystick module displays warning icons and informational messages, in a dedicated message window.

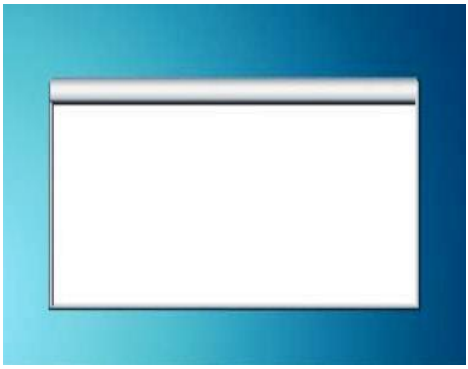

12.3.10.1 Restart message

This icon is show when the system to be restarted. (Most of the time when a module has been exchanged or added.)

12.3.10.2 Timer message

This symbol is displayed when the control system is changing between different states. An example would be entering into Programming Mode. The symbol is animated to show the sands falling.

12.3.10.3 Sleep message

This symbol will be displayed for a short time before the R-net enters into a sleep state.

12.3.10.4 Joystick deflected message

This message is show if the wheelchair is started up and the joystick is not in its zero position. If you let go of the joystick, the system will start up normally and the message disappears.

12.3.10.5 E-stop message

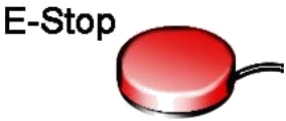

If the External Profile Switch is activated during drive, or actuator operation, this symbol will be displayed.

12.3.10.6 Error codes

If something is wrong with the wheelchairs electronics, the wheelchair will stop driving and a trip code (error code) will be displayed on the screen of the Joystick module.

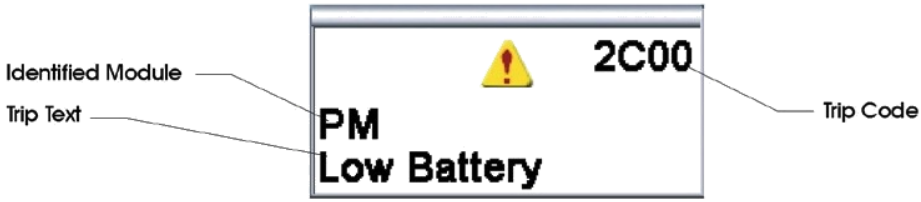

For more explanation about the trip code we refer to the chapter trouble shooting.

12.3.11 Current profile (base bar)

The currently selected Profile is shown in numeric form.

12.3.12 Motor temperature (base bar)

This symbol is displayed when the control system has intentionally reduced the power to the motors, in order to protect them against heat damage.

12.3.13 Control system temperature (base bar)

This symbol is displayed when the control system has intentionally reduced its own power, in order to protect itself against heat damage.

12.3.14 Wheelchair lock

The wheelchair has the option to secure against unintended use. Therefore the joystick module can be locked. This way it is protected against unintended use during storage or parking.

Lock options

The control system of the wheelchair can be locked in two ways: By using a button sequence on the keypad, or with a physical key. This key can ordered as an accessory.

Keypad locking

To lock the wheelchair by using the keypad lock:

- While the wheelchair is switched on, depress and hold the ON/OFF button.
- After 1 second the control system will beep.
- Now release the ON/OFF button.
- Deflect the joystick forwards until the control system beeps.
- Deflect the joystick in reverse until the control system beeps.
- Release the joystick, there will be a long beep.
- The wheelchair is now locked.
- The following screen will be displayed in the control box:

Wheelchair in locking mode

To unlock the wheelchair:

- If the control system has been switched off, press the ON/OFF button.
- Deflect the joystick forwards until the control system beeps.
- Deflect the joystick in reverse until the control system beeps.
- Release the joystick, there will be a long beep.
- The wheelchair is now unlocked.

Locking the wheelchair by using a physical key

locking key

To lock the wheelchair with the key lock:
- Insert and remove the supplied PGDT key into the charger socket.
- The wheelchair is now locked.

To unlock the wheelchair:
- Insert and remove the supplied PGDT key into the charger socket.
- The wheelchair is now unlocked.

12.4 Buttons

The joystick module has several button which will be explained below.

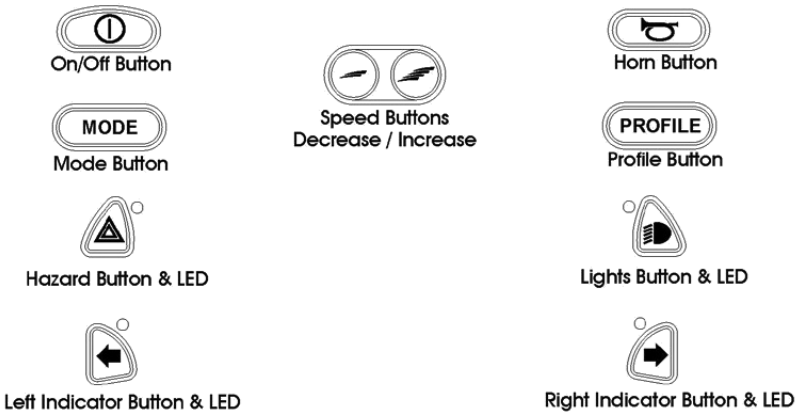

12.4.1 On/off button

The On/Off button applies power to the control system electronics, which in turn supply power to the wheelchair's motors. Do not use the On/Off button to stop the wheelchair unless there is an emergency. (If you do, you may shorten the life of the wheelchair drive components).

⚠ CAUTION

Always make sure the wheelchair is switched off before entering or leaving the wheelchair. If the wheelchair is switched on during transferring, there is a danger that the joystick will be touched and the wheelchair will move.

12.4.2 Horn button

The horn will sound while this button is depressed.

12.4.3 Speed decrease button

This button decreases the speed setting.

12.4.4 Speed increase button

This button increases the speed setting. (It does not increase the maximum speed!).

12.4.5 Mode button

The Mode button allows the user to navigate through the available operating modes for the control system. The available modes are dependent on programming and the range of auxiliary output devices connected to the control system.

12.4.6 Profile button

The Profile button allows the user to navigate through the available Profiles for the control system. The number of available Profiles is dependent on how the control system is programmed.
Depending on the way the control system has been programmed a momentary screen may be displayed when the button is pressed.

12.4.7 Hazard Warning Button and LED

This button activates and de-activates the wheelchair's hazard lights. Depress the button to turn the hazards on and depress the button again to turn them off. When activated the hazard LED and the indicator LEDs will flash in sync with the wheelchair's indicators.

12.4.8 Lights Button and LED

This button activates and de-activates the wheelchair's lights. Depress the button to turn the lights on and depress the button again to turn them off. When activated the lights LED will illuminate.

12.4.9 Left Indicator Button and LED

This button activates and de-activates the wheelchair's left indicator. Depress the button to turn the indicator on and depress the button again to turn it off. When activated the left indicator LED will flash in sync with the wheelchair's indicator(s).

12.4.10 Right Indicator Button and LED

This button activates and de-activates the wheelchair's right indicator. Depress the button to turn the indicator on and depress the button again to turn it off.
When activated the right indicator LED will flash in sync with the wheelchair's indicator(s).

12.5 Jack sockets

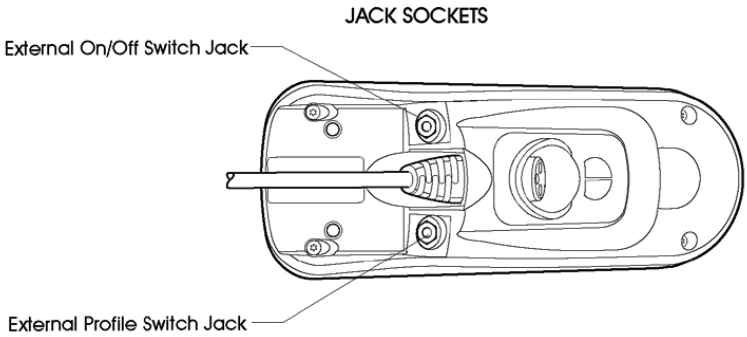

12.5.1 External profile switch jack

This allows the user to select Profiles using an external device, such as a buddy button. To change the Profile whilst driving simply press the button.
If the control system is set to latched drive or actuator control operation, then the polarity of the jack input is reversed to effect a failsafe system; meaning this input will provide an External Profile Switch function and an Emergency Stop Switch function.

12.5.2 External on/off switch jack

This allows the user to turn the control system on and off using an external device, such as a buddy button.

NOTE

The Joystick Module is supplied with rubber bungs that must be inserted into the Jack Socket when no external device is connected.

12.6 R-net Connectors

To connect the Communication Cables:
• Holding the connector housing, firmly push the connector into its mate until you can no longer see the yellow plastic.

The connectors are secured using a friction system.
To disconnect the Communication Cables:
• Holding the connector housing firmly, pull the connectors apart.

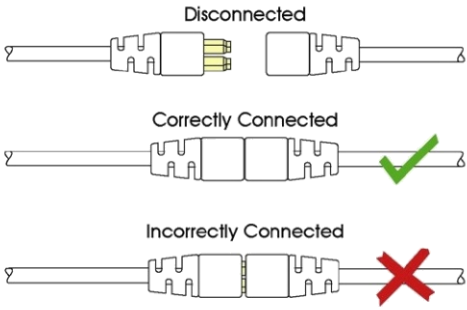

Do not hold or pull on the cable. Always grip the connector when connecting and disconnecting.

When the control system is first switched on after a connection, or system component change the Timer will be displayed whilst the system checks itself and then the re-start icon will be displayed. Switch the control system off and on again to operate.

⚠ CAUTION

If the communication is poor because of damaged cables, a trip code "bad cable" might be show on the display. Should this message appear on the display contact your local supplier to have the wheelchair checked.

12.7 Joystick

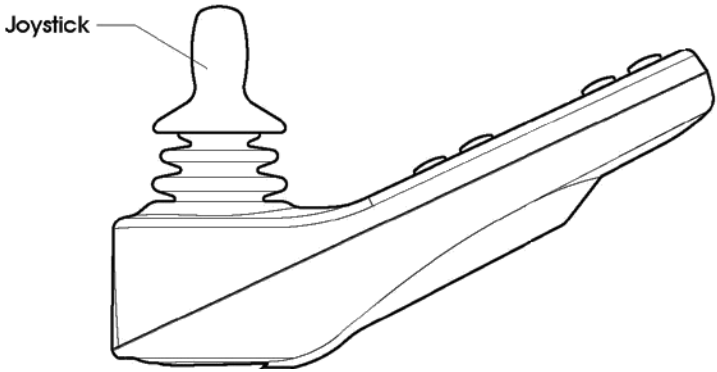

The joystick is primarily used to drive the wheelchair. just push the joystick into the direction you want to drive and the wheelchair will start to move in that direction.

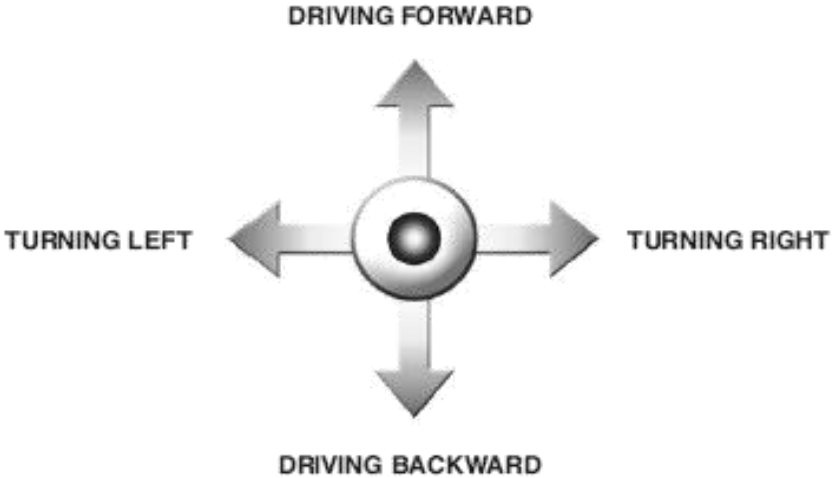

The secondary purpose of the joystick is to navigate through men menu of the wheelchair. By moving the joystick forward or backward you can scroll up or down through the menu, by moving to the right you can enter a sub selection.

⚠ CAUTION

We strongly recommend to practice the function of the joystick before starting to drive with the wheelchair.

13 Electric system

13.1 Batteries

The wheelchair has two serial connected 12 volt maintenance free batteries for the power supply. The capacity of the batteries can be 60, 72 or 85 Amps. The batteries are fitted in the center of the chassis to arrange a low centre point of gravity. Both batteries are easy accessible for maintenance or replacement.

Position and access of the maintenance free batteries

⚠ CAUTION

Be careful when using metal objects close to the batteries. A short circuit might easily create strong sparks and can cause a fire. Should you need to work on the batteries, use isolated tools and wear protective gear on hands and eyes.

⚠ CAUTION

Batteries are chemical components and shall be treated as such. In case of removal, one shall treat the batteries as chemical waste. The batteries need to be disposed according to the local regulations for chemical waste.

13.2 Fuses

The wheelchair has one main fuse to protect the batteries against overload and short circuit. This main fuse is placed between the rear wheels and easy accessible. The electronics itself is completely protected against short circuit and overload.

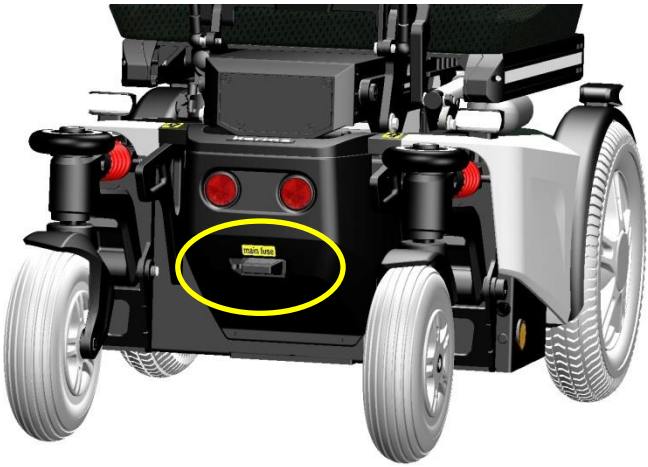

The main fuse is also used to disconnect the batteries from the electronics. This is required when transporting the wheelchair on a plane.

13.3 Additional fuses

Beside this main fuse there is a fuse on each battery close to one of the connecting pole. They are integrated into the battery cable. This is to protect each battery separate for short circuit. These fuses are stronger than the main fuse, so in case of a short circuit, the main fuse will blow first.

⚠ CAUTION

If the fuse in blown, please contact your local authorized supplier. He should check the wheelchair first before replacing the main fuse. The fuse only blows if a serious problem occurs.

⚠ CAUTION

Only use original spare part fuses of Karma. Using other fuses might damage the electronic system or even cause fire.

14 Using the wheelchair

14.1 General warnings and advices

Please read this section of the manual very carefully as it contains issues related to safety and possible hazards.

⚠ WARNING

- When the user is driving the wheelchair for the first time, the supplier has to make sure that the maximum driving speed and curving speed are set in a slow mode. After learning to drive the wheelchair safely, the set speeds can be increased.
- Special care should be taken in driving on unequal surfaces such as slopes, unequal pavements and during descending from footpaths.
- It is not allowed to carry passengers other than the user on the wheelchair.
- On slippery surfaces, like ice and snow, the driving speed must be reduced accordingly.
- Do not drive through water puddles, you cannot see how deep they are. This might lead to dangerous situations. water can damage the wheelchair.
- Only charge the wheelchair in well ventilated areas.
- Note that no other persons or animals are in the direct contact zone of the wheelchair when using it. This is for both driving and using the high low. Because the wheelchair is a very powerful machine with a relative high weight this might lead to severe injuries.
- When driving the wheelchair in the dark, be sure that you have the lights switched on.
- Always drive slowly in the near surrounding of other people or animals.
- Although the wheelchair is intensively tested, it cannot be excluded completely that the wheelchair influences the performance of electromagnetic fields (e.g. Alarm systems of shops, automatic doors etc.).
- The driving characteristics of the wheelchair can be influenced by strong electromagnetic fields (e.g. Those emitted by portable telephones, electricity generators or high-power sources. Try to avoid the near presence of any radiation source such as radio's, cell phones etc. If your wheelchair reacts to a source of radiation with unexpected behavior, try to drive slowly to a safe place, turn off your wheelchair and try to extinguish the radiation source.

14.2 Use in combination with other products

Different- or customized seat:

⚠ WARNING

- The combination of seat and user does not exceed the maximum allowed weight on the wheelchair carrier and tilt mechanism (136 kg).
- The seat is fixed properly to the seat post.
- The centre of gravity of the combination of user and seat is on the same spot as when the standard seat would be used.
- The position of the tray table and/or the control unit is comfortable and easy to use for the user.
- The used materials are in compliance with the accepted standards mentioned in EN 12184 regarding flame resistance and bio-compatibility.
- The seat or any other mounted parts do not touch the wheelchair carrier when using the high low function. This is because the dimensions will vary from the standard seat. This has to be checked by watching these parts when activating the high low.
- The seat or any other mounted parts do not touch the wheelchair carrier when using the tilt function. This is because the dimensions will vary from the standard seat. This has to be checked by watching these parts when tilting the chair.

⚠ WARNING

Changes which are made by third parties are not covered by the warranty and responsibility of Karma Medical.

14.3 hot and cold surfaces

⚠ WARNING

Some parts of the wheelchair can reach high temperatures when exposed to direct sun. Please be careful with touching especially the plastic parts under these circumstances in order to prevent skin burning.

⚠ WARNING

The wheelchair can reach low temperatures when exposed to cold weather (below zero degrees Celsius). Please take caution in touching especially the metal parts with wet body parts under these circumstances as they easily can freeze and get stuck to these surfaces.

14.4 Danger of pinching

User

Special care has been taken to make sure that the chance that the user pinches him or herself while seated in the wheelchair is minimal. However, there are few situations that might lead to injury. Special caution has to be taken under the following circumstances;

- When the tray table is closed, pinching of fingers or other body parts is possible between the locking parts.
- When the revolving control unit is used in the tray table, pinching of fingers or other body parts is possible when the control unit is being turned upside down.
- When adjusting the seat while the user is sitting in the chair, please note that no body parts are in the direct zone of the moving parts.

⚠ WARNING

When moving the seat down, the tilt frame comes very close to the top chassis cover. This creates a pinching danger, when at this time, hands are on the top cover at the rear end of the chassis. For this reason a warming decal is placed on the top cover on the rear of the chassis.
We advise you to always keep your hands or the hands from other persons away from the rear end of the top chassis cover.

⚠ WARNING

All areas where there might be a risk of pinching are indicated by these warning decals:

14.5 Surroundings

Special care has been taken to make sure that the change that the surroundings pinches him or herself is minimal. However there are few situations that might lead to injury. Special caution has to be taken under the following circumstances;

- When driving the wheelchair, make sure that no persons or animals are in the near surrounding, because running over e.g. feet will lead to serious injury as a result of the high weight of the electrical wheelchair.
- When using the seat lift and/or the electrical tilt adjustment, make sure that no persons or animals are in the near surrounding, because it is possible to get pinched by the moving mechanism, although the moving parts are designed to be as safe as possible.

14.6 Precautions to prevent dangerous situations

In order to prevent dangerous situations please take note of the following precautions:

● Only charge the battery in well ventilated areas.

● Only drive at slow speed in the direct surrounding of other people or animals.

● Always turn on the head and tail lights when using the chair under circumstances with limited sight like darkness or fog.

● Please do not allow any persons to stand or sit on the wheelchair except for the user.

● Make sure that the remaining battery power is sufficient for the distance that is to be bridged.

● Do not replace a damaged fuse before it is known why the fuse is blown and the cause is taken away.

● Have the wheelchair checked by your supplier after any collision or when the wheelchair is otherwise (visual) damaged.

● Check the tire pressure and refill the tires if necessary every four weeks. Check the tires at the same time for wear and damage. Replace if necessary.

● In order to ensure that your wheelchair is in good condition, please contact Karma authorized dealers regularly and make further wheelchair inspection and maintenance records. We recommend that you inspect and maintain your wheelchair **every six months**.

● Do not change the programmed driving characteristics of your control unit, as it is specific for the situation of the user. If any adjustment is required because of a change of circumstances, please contact your supplier.

⚠ WARNING

Always make sure that, when positioned on slopes, the brakes are attached (no Freewheel).
If the wheelchair is in freewheel mode, there is a risk that the wheelchair might start to move in an uncontrolled way. This might lead to personal or material damage.

14.7 Use on slopes: driving on downhill slopes

Driving on downhill slopes must always be done at a low speed and with great care. Avoid sudden braking, abrupt avoidance maneuvers and never maintain a speed higher than that at which you can maneuver the wheelchair in a safe and secure manner. Always be aware of the fact that the control of the wheelchair driving downhill is different than on level surfaces.

Max. acceptable downhill slope

NOTE

When driving on downhill slopes with an uneven or slippery surface (for example grass, gravel, sand, ice or snow) you should drive with extra care and attention.

NOTE

When driving on downhill you can use the tilt (if built in) to create a more stable seating position for yourself.

WARNING

Never drive downhill on slopes bigger than 10°. This might result into uncontrollable behavior of the wheelchair. This can lead to material or personal damage. (Dynamic stability according to ISO 7176-2= 6°).

WARNING

The position of the seat in height and angle or the position of the backrest has great influence on the stability of the wheelchair when driving on slopes. Make sure the seat is in the optimal driving position to avoid tipping over.

WARNING

The position of the seat in height and angle or the position of the backrest has great influence on the stability of the wheelchair if driving on slopes. Make sure the seat is in the optimal driving position to avoid tipping over.

14.8 Use on slopes: driving on uphill slopes

Driving on uphill slopes must always be performed with great care and attention. Avoid sudden avoidance maneuvers and never drive at a speed higher than needed to maneuver the wheelchair in a safe and secure way. Avoid holes and bumps as much as possible. Drive slowly and controlled.

Max. acceptable uphill slope

NOTE

When driving on uphill slopes with an uneven or slippery surface (for example grass, gravel, sand, ice or snow) you should drive with extra care and attention.

NOTE

When driving on uphill you can use the tilt (if built in) to create a more stable seating position for yourself.

WARNING

Never drive uphill on slopes bigger than 10°. This might result into uncontrollable behavior of the wheelchair. This can lead to material or personal damage. (Dynamic stability according to ISO 7176-2= 6°).

WARNING

The position of the seat in height and angle or the position of the backrest has great influence on the stability of the wheelchair if driving on slopes. Make sure the seat is in the optimal driving position to avoid tipping over.

14.9 Driving on sideways slopes

Driving on a sideways slope must always be performed with great care. Avoid sudden avoidance maneuvers and never drive at a speed higher than needed to maneuver the wheelchair in a safe and secure way. Avoid holes and bumps as much as possible. Drive slowly and controlled.

Driving on sideways slopes

NOTE

When driving on sideways slopes with an uneven or slippery surface (for example grass, gravel, sand, ice or snow) you should drive with extra care and attention.

WARNING

Never drive sideways slopes bigger than 10°. This might result into uncontrollable behavior of the wheelchair. This can lead to material or personal damage. (Dynamic stability according to ISO 7176-2= 6°).

WARNING

The position of the seat in height or the position of the backrest has great influence on the stability of the wheelchair if driving on slopes. Make sure the seat is in the optimal driving position to avoid tipping over.

14.10 Obstacle climbing

Do not drive the wheelchair over obstacles of a height bigger than 70mm. Driving over tall edges increases the risk of tipping over as well as the risk of damage to the wheelchair. Always be aware when climbing obstacles of the stability of your wheelchair.

Driving down of a higher surface (like pavement), Always be aware of the sudden forward movement of your wheelchair when driving down of it. If your wheelchair has powered seat tilt, you can use the seat tilt for more stability whilst driving of the pavement.

NOTE

When driving over obstacles with uneven or slippery surface (for example grass, gravel, sand, ice or snow) you should drive with extra care and attention.

WARNING

Never drive on obstacles higher than 70mm. Always drive with maximum attention and great care.

14.11 use in presence of electromagnetic fields, e.g. from cell phones.

Use your cell phone only when the wheelchair is switched off. Although the wheelchair is tested and approved for electromagnetic interference, there is a very small change that strong electromagnetic fields from cell phones or some other electrical products lead to unexpected and unpredictable electrical reactions from the wheelchair.

Try to avoid the near presence of any radiation source such as radio's, cell phones etc. If your wheelchair reacts to a source of radiation with unexpected behavior, try to drive slowly to a safe place, turn off your wheelchair and try to extinguish the radiation source.

When it is unavoidable to use the wheelchair under these circumstances, be prepared for any unexpected and unpredictable electrical reactions from the wheelchair.

⚠ WARNING

If you enter an area where there might a risk of strong electromagnetic interference, always reduce your driving speed and drive carefully.

⚠ WARNING

Avoid area's where strong military transmitters are used. They might interfere with your wheelchairs electronics.

⚠ WARNING

Avoid area's closeness to high voltage power lines. They might interfere with your wheelchairs electronics.

⚠ WARNING

Avoid area's closeness to high frequency energy equipment, like high frequency welding machines. They might interfere with your wheelchairs electronics.

15 Driving the wheelchair

The wheelchair is designed for indoor and outdoor use. When driving indoors, you must be careful when driving in, for example, narrow passageways, when passing through doors and entryways as well as when using elevators, ramps, etc. Also be aware of the risk of things getting caught in the machinery when you use the electrical seat lift and seat tilt, in particular when the wheelchair has been run in under a table, workbench or something like that.

⚠ WARNING

Always make sure the wheelchair is switched off before entering or leaving the wheelchair. If the wheelchair is switched on during transferring, there is a danger that the joystick will be touched and the wheelchair will move.

Outdoors, you must remember to drive very slowly on steep downhill slopes and to be very careful when driving on uneven surfaces, on uphill slopes, with sideways slopes and when negotiating obstacles. Always maintain a safe distance from the edge when driving close to drop-offs and pavements.

ⓘ NOTE

We recommend that you should make repeated test drives in areas in which you know you feel secure so that you are quite familiar with how the wheelchair and its accessories behave in different situations before you begin using the wheelchair on normal roads and other public areas.

15.1 Driving in general

Make sure that the control system is mounted right and that the joystick position is correct. The hand or limb you use to operate the joystick should be supported, for example by the wheelchair armrest. Do not use the joystick as the sole support for your hand or limb, the wheelchair movements and bumps could upset your control, which might result in uncontrolled driving.

1. Switch on the power by pressing the on/off button on the control panel.

2. Select the right profile (start with the indoor profile)

⚠ WARNING

Always make sure the wheelchair is switched off before entering or leaving the wheelchair. If the wheelchair is switched on during transferring, there is a danger that the joystick will be touched and the wheelchair will move.

3. Set an appropriate maximum speed by pressing the decrease or increase button until the desired indicator lamp lights up for your type of driving. It is preferable to begin with a low speed.

4. Carefully move the joystick forward to drive forward, and backward to drive backward.

5. The speed of the wheelchair is adjusted continuously by the joystick being moved different distances forward and backward respectively. The wheelchair's electronics make creep driving possible over edges (max. 70mm.). You can drive up to the edge, and then carefully drive over it.

⚠ WARNING

Do not perform the first test drive on your own. The test drive is of course just a check of how you and the wheelchair function together, and you may need some assistance.
Before driving, check that the wheel freewheel is set in the drive position.

15.2 Driving technique

The electronic control system of the wheelchair “reads” your joystick movements and transforms these “commands” into movements of the wheelchair. You will need very little concentration to control the wheelchair, which is especially useful if you are inexperienced. One popular technique is to simply point the joystick in the direction you want to go. The wheelchair will move in the direction you push the joystick. Always think about driving as flexibly and fluently as possible and avoid heavy braking and avoidance maneuvers. The smoother you move the joystick, the smoother the wheelchair will drive.

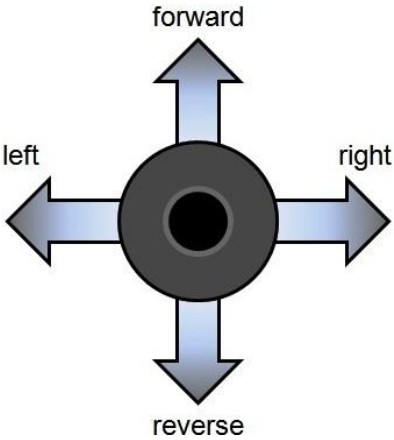

15.3 Stopping the wheelchair

If you would like to stop simply move the joystick slowly towards the centre and release the joystick. The wheelchair will come to a gentle stop. If you want to stop more quickly, simply let go of the joystick. It will put itself back into neutral position, which makes the wheelchair stop. Is there an emergency situation and you need to make an emergency stop, pull the joystick backwards. This will slow down and stop the wheelchair very fast.

⚠ WARNING

Be careful driving backwards. You cannot really oversee where you are driving. It is better, when the space is available, to turn around and drive forward. By driving backwards not seeing where you are heading you might bump into something or someone. This can lead to personal or material damage.

⚠ WARNING

Be careful using the emergency brake. Especially when driving on slopes. Extreme braking might create the risk of tipping over when you are on a slope. Also be away that during braking you tend to lose balance yourself. If not strapped into a seat belt you might run the risk of falling out of your wheelchair whilst braking very hard.

16 Using the powered seat functions

If your wheelchair has powered seat functions like seat lift, seat tilt , backrest recline and/or powered legrest, you can control them by using the menu on the joystick module.

To enter the seat function menu, push the button "Mode" on the joystick module. You will leave the drive mode.

16.1 Seat lift

To enter the seat lift function menu, push the button "Mode" on the joystick module. You will leave the drive mode and getting into the seat function mode.

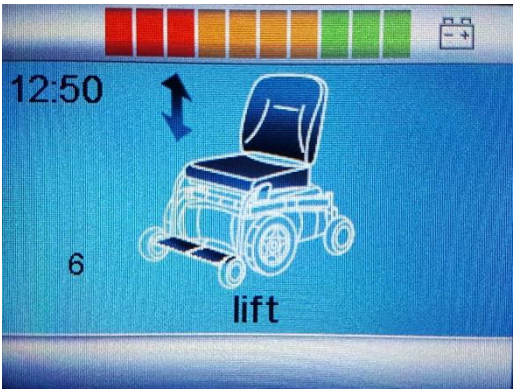

Seat lift screen in the menu

By moving the joystick to the left or right you can switch between different powered seat functions. If you want to move the seat lift, move the joystick side ways until you see the seat function “Lift”. Now move the joystick backwards and the seat lift will start to move upwards. As long as you pull the joystick backwards, the seat lift will move up. Release the joystick and the seat lift movement will stop. Push the joystick forward and the seat will tilt into forward position.

NOTE

The acceleration and speed of each seat function can be programmed by your local authorized supplier. Should you request a different setting, please contact your local authorized supplier.

NOTE

The default movement of deflection is set to backwards for lifting the seat up. Should you want to switch the axis direction of the joystick, please contact your authorized dealer to have the deflection set in the opposite direction.

16.2 Seat tilt

To enter the seat tilt function in the menu, push the button "Mode" on the joystick module. You will leave the drive mode and getting into the seat function mode.

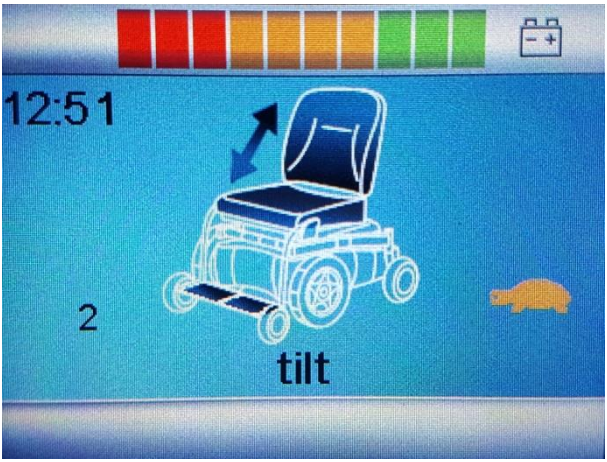

Seat tilt screen in the menu

By moving the joystick to the left or right you can switch between different powered seat functions. If you want to move the seat tilt, move the joystick side ways until you see the seat function “tilt”. Now move the joystick backwards and the seat tilt will start to tilt backwards. As long as you pull the joystick backwards, the seat tilt will tilt backwards. Release the joystick and the seat tilt movement will stop. Push the joystick forward and the seat will tilt into forward position.

NOTE

The acceleration and speed of each seat function can be programmed by your local authorized supplier. Should you request a different setting, please contact your local authorized supplier.

NOTE

The default movement of deflection is set to backwards for tilting the seat backwards. Should you want to switch the axis direction of the joystick, please contact your authorized dealer to have the deflection set in the opposite direction.

16.3 Backrest

To enter the backrest recline function in the menu, push the button "Mode" on the joystick module. You will leave the drive mode and getting into the seat function mode.

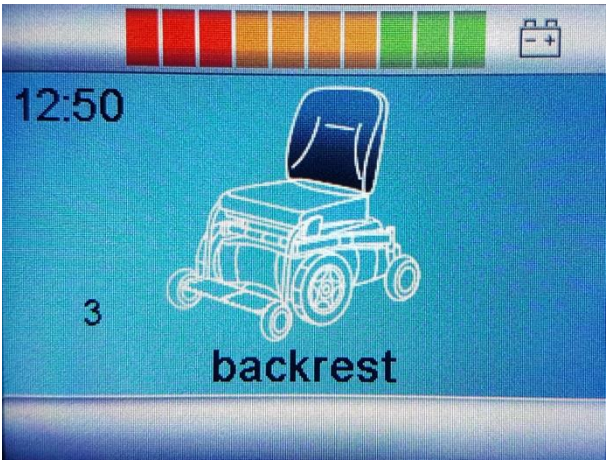

Backrest recline screen in the menu

By moving the joystick to the left or right you can switch between different powered seat functions. If you want to move the backrest function, move the joystick side ways until you see the seat function “backrest”. Now move the joystick backwards and the backrest will start to recline backwards. As long as you pull the joystick backwards, the backrest will recline backwards. Release the joystick and the backrest movement will stop. Push the joystick forward and the backrest will recline into forward position.

NOTE

The acceleration and speed of each seat function can be programmed by your local authorized supplier. Should you request a different setting, please contact your local authorized supplier.

NOTE

The default movement of deflection is set to backwards for reclining the backrest backwards. Should you want to switch the axis direction of the joystick, please contact your authorized dealer to have the deflection set in the opposite direction.

16.4 Legrest

To enter the legrest adjustment function in the menu, push the button "Mode" on the joystick module. You will leave the drive mode and getting into the seat function mode.

Backrest recline screen in the menu

By moving the joystick to the left or right you can switch between different powered seat functions. If you want to move the legrest function, move the joystick side ways until you see the seat function “legrest”. Now move the joystick backwards and the legrest will start to stretch and go up. As long as you pull the joystick backwards, the legrest will go up into stretch. Release the joystick and the legrest movement will stop. Push the joystick forward and the legrest will lower itself in to a lower position.

NOTE

The acceleration and speed of each seat function can be programmed by your local authorized supplier. Should you request a different setting, please contact your local authorized supplier.

NOTE

The default movement of deflection is set to backwards for stretching the legrest. Should you want to switch the axis direction of the joystick, please contact your authorized dealer to have the deflection set in the opposite direction.

16.5 Relax position

To enter the support wheels adjustment function in the menu, push the button "Mode" on the joystick module. You will leave the drive mode and getting into the seat function mode.

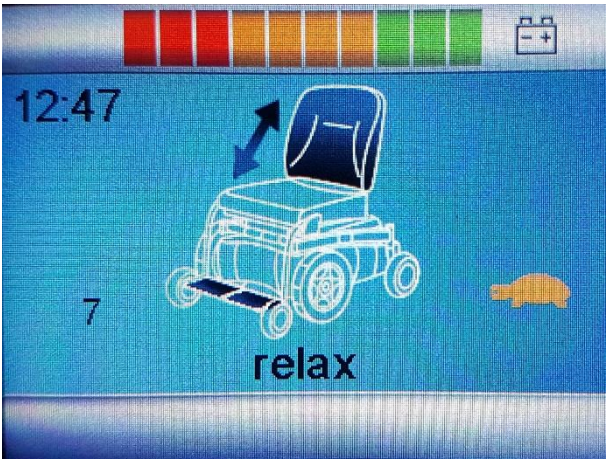

relax position screen in the menu

Move the joystick to the left or right until you see the seat function “relax”. Now move the joystick backwards and the seat will go in to the relax (laying) position. As long as you pull the joystick backwards, the seat will stretch itself. Release the joystick and the movement will stop. Push the joystick forward and the seat will get back in to the seating position again.

NOTE

The acceleration and speed of each seat function can be programmed by your local authorized supplier. Should you request a different setting, please contact your local authorized supplier.

NOTE

The default movement of deflection is set to backwards for relaxing the seat backwards. Should you want to switch the axis direction of the joystick, please contact your authorized dealer to have the deflection set in the opposite direction.

16.6 Using additional function of the wheelchair menu

If your wheelchair has additional function built in like the blue tooth mouse function, you are able to control this using the menu and joystick.

To enter the blue tooth mouse menu, push the button "Mode" on the joystick module. You will leave the driving mode. The first screen you will see is the powered seat function screen. If you push the "mode" button once more, you will enter the blue tooth screen. Now the joystick becomes the mouse for using the PC or laptop.

For further information about the additional options, we refer to your local authorized supplier.

17 Handling the mechanical brakes

The drive motors of the wheelchair have electro mechanical brakes. The brake can be released to set the wheelchair into freewheel mode. In freewheel mode the wheelchair can be pushed. this might be necessary to move the wheelchair in certain cases.

17.1 Release the mechanical brakes

To release the mechanical brakes, take the following steps.

Look for the red lever on each of the driving motor. Around the lever is a instruction sticker which shows the direction to open or lock the mechanical brake. Move the lever into the "open" position on each motor. Now the wheelchair is in freewheel mode and can be pushed.

To lock the brakes, move the lever in to the "lock" position. on both motors.

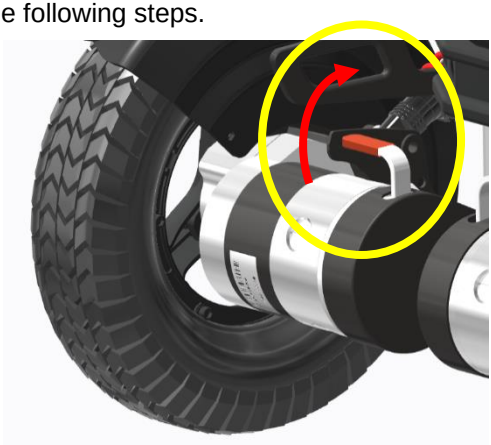

NOTE

If you want to put the wheelchair into freewheel mode, be sure to switch the electronics first. Leaving the electronics switched on will result in a large resistance whilst pushing in freewheel mode.

WARNING

If the parking brake is released (free-wheel mode), the wheelchair cannot be driven by the electronics. Therefore, the release of the brakes should only be done in emergency cases and or for servicing. If the user is on board, the parking brakes should always be attached.

WARNING

Always make sure that, when positioned on slopes, the brakes are attached (no Freewheel). If the wheelchair is in freewheel mode, there is a risk that the wheelchair might start to move in an uncontrolled way. This might lead to personal or material damage.

18 Charging the maintenance free batteries

The amount of charge in your maintenance free batteries is depending on a number of factors, including the way you use your wheelchair, the temperature of the maintenance free batteries, their age and the type of maintenance free batteries used. These factors will affect the distance you can travel in your wheelchair. All wheelchair maintenance free batteries will gradually lose their capacity when they get older. The most important factor that is reducing the life span of your batteries is the amount of charge you take from the batteries before you recharge them. The maintenance free battery life is also reduced by the number of times you charge and discharge the batteries. Normally the amount of cycles is between 300 and 700 times. To make your maintenance free batteries last longer, do not allow them to become completely discharged. Always recharge your maintenance free batteries promptly after they are discharged. If your battery gauge reading seems to fall more quickly than usual, your batteries may be worn out. If you wheelchair shows these indications, please contact your local authorized supplier to have the maintenance free batteries checked.

18.1 Battery level

The power level of the batteries is displayed on the LCD screen of the joystick module.

Battery indicator

If the maintenance free batteries are fully charged, all ten LED's on the top bar light up. The more energy is used the more LED extinguish, starting on the right side.

If only the red LED are still on, it indicates that recharging of the maintenance free batteries is required.

If only two red LED's are flashing, it indicates that the maintenance free batteries are empty and should be charged immediately.

NOTE

If the battery indicator shows only two segments in flashing, you should charge the batteries as soon as possible. This flashing is a warning signal. You are still able to drive the wheelchair but only for a short distance. If the batteries reach a level where they cannot supply enough energy to control the wheelchair is a save way. The wheelchair will stop and give an error warning saying “low battery voltage”

NOTE

If the batteries should be drained completely, it is important that you charge them up again as soon as possible since a complete loss of charge reduces the lifespan of the batteries.

NOTE

Information about the charger which is supplied with the wheelchair can be found in the user manual of the charger itself. You can find the charger user manual in the tool bag which comes with the wheelchair.

NOTE

Some local dealers supply the wheelchair with their own brand of batteries and battery charger. For information about these batteries and charger, you should ask your local authorized supplier.

18.2 Charging socket

The charger socket can be found on the front side of the joystick module. If the wheelchair has an integrated desktop control, the charger socket will be on the side of the joystick module.

Charger socket position

Battery charger

The wheelchair can be delivered with a charger. This charger has a capacity to charge up to 11 ampere. This charger will fully charge the batteries within 8 hours.

NOTE

For more detailed information about the charger and its functions, we refer to the manual which comes with the charger.

NOTE

In some occasions putting in the charger socket yourself can be very difficult. Sometimes you would like to have the charger socket on a specific place on your wheelchair. For this reason the Wheelchair has an additional charger socket which can be place on the spot you can reach yourself. For more information, please contact your local authorized supplier.

⚠ WARNING

Be sure that the charger plug is pushed fully in position. You will not be able to drive the wheelchair when the charger is connected. If the wheelchair does drive with the charger plugged in, contact your local authorized supplier.

ⓘ NOTE

In some occasions it might be the case that your local supplier will deliver the wheelchair with a different brand charger. In that case your local supplier will inform you about the functionality of that charger and will also make sure the charger comes with a user manual.

18.3 Disposal of broken or worn out batteries

Batteries don’t last forever. Therefore, batteries need to be changed after a certain period. The safest way is to have this done by authorized personnel of your local supplier. Batteries are chemical waste and need to be treated as such, using protective clothing, gloves and glasses.

⚠ WARNING

Replacing damaged or old batteries needs to be done by authorized personnel wearing protective clothing, gloves and safety glasses.

⚠ WARNING

Old or damaged batteries are classified as chemical waste and need to be disposed according to the local regulations for chemical waste. Please contact your local supplier for further details.

19 Transport of the wheelchair

19.1 4-point tiedown restraint system

The wheelchair must only be transported in a vehicle that is approved or adapted for such purposes. It is safest if the wheelchair is separated from the driver's compartment. Transportation in a trailer is also an optional recommendation. Should the wheelchair be transported in an MPV/estate car or other vehicle, it is vital that the wheelchair is properly fixed and that the fixing points of the car are well anchored. In all situations of transportation, the wheelchair needs to be properly fixed using a 4-point heavy duty webbing restraint to prevent the wheelchair from sliding or tilting while driving. Check that the wheelchair is properly fastened and that the parking brakes are engaged. The wheelchair can be locked into position by using fastening straps through the brackets in the front and the back, each marked with an indication sticker.

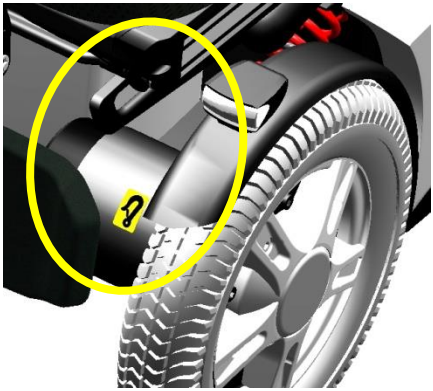

Front transportation loops

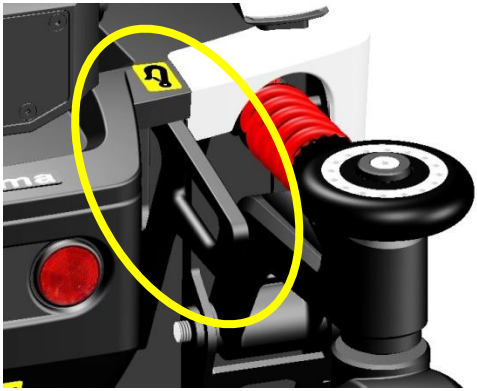

Rear transportation loops

NOTE

The specifications of the wheelchair are in accordance with the requirements specified in ISO 7176-19-2008

Secure the wheelchair according to the manufacturer of the vehicle restraint systems instructions. Always make sure that the fastening points on the transport vehicle are well anchored. Use of this is strongly advised since the heavy wheelchair can cause serious problems in case of a car accident. The wheelchair fulfils al requirements according to the ISO 7176-19:2008 standard ("Wheeled mobility devices for use in motor vehicles).

NOTE

Karma Medical Taiwan would always recommend transferring to a car seat within a vehicle; however should this not be possible, the following is the safest method:

a. The wheelchair must be positioned in a forward facing position.

b. An Unwin restraint system like model Gemini 3 or a different brand with equivalent specification must be used.

c. As a car safety belt a Klippan Safety AB belt, model 907428 or a different brand with equivalent specification must be used.

d. The restraint system must be fixed on the specific points of the wheelchair, which show a label of a transportation hook.

e. A head restraint system must be fitted during transportation. This device must be suitably positioned and able to stay on during transportation.

f. The center point of gravity of the wheelchair during transportation should be as low as possible. A powered seat elevator must be in its drive position, the backrest should be upright, the seat should be in a horizontal position and the legrest should be positioned in a normal seating position.

g. During transportation the wheelchair should be switched off to prevent it from moving by accidental joystick use.

h. Make sure the tire pressure of each wheel of the wheelchair is in the optimal condition. Too low tire pressure can result in an instable behavior of the wheelchair during transportation.

NOTE

The position belt of a wheelchair is not meant to be used as a car safety belt. It only prevents the user from sliding out of the seat while driving the wheelchair. If a user is transported in his wheelchair, he or she should wear an extra car safety belt, which is attached to the vehicle like all the car safety belts.

NOTE

When shipped by boat, please give special attention to prevent contact with salt water or air. Salt water is extremely corrosive and might lead to unwanted damage of the product.

19.1.1 Transportation guideline

The wheelchair has a 4-point heavy duty webbing restraint. Use two brackets on the front end and two brackets on each rear side of the chassis. The brackets are indicated with a sticker.
These securing points and its location have been designed and successfully tested according to ISO7176-19:2008

The angle of the straps should be around 45° to the horizontal plane. This is in order to have maximum effect in vertical and horizontal direction.

The straps must be connected to the vehicle at suitable anchor points. Make sure that the tire pressure is at the recommended level so the straps can have maximum effect. Make sure the straps are tightened to maintain optimal security.

⚠ WARNING

Poor fixations of the wheelchair in a vehicle might cause damage to the vehicle itself, the wheelchair or the passengers inside the vehicle while driving. Not using a car safety belt while sitting in a wheelchair might lead to serious injuries in case of an accident.

19.1.2 Safety belt

If the user is transported in his wheelchair, it is necessary to use a car safety belt to secure the wheelchair user.

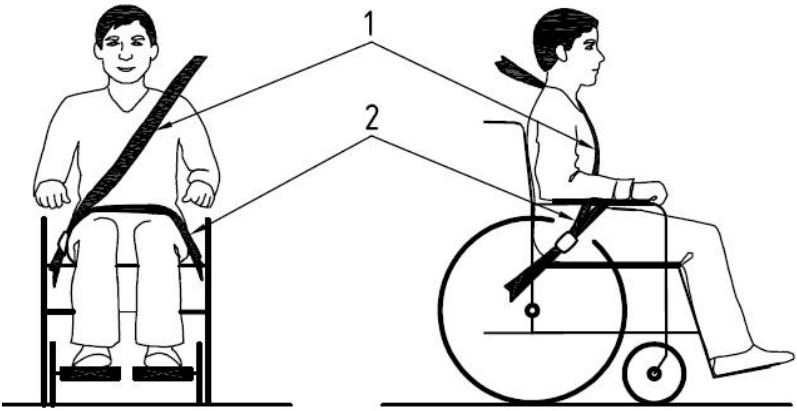

Positioning of the car safety belts for wheelchair users.

The wheelchair has been crash tested using a heavy-duty Dahl tie down belt model 501780 or 501781 and a 3-point occupant restraint (Dahl part no: 500984). We advise you to use a similar system or a system that is equally specified. It is very important to use the safety belt in the right angles according to the wheelchair user. The angle for the pelvis part (2) of the safety belt must be in angle of 30- 75 ° with the horizontal plane. (see picture below). Also, the side angle should stay between the vertical planes to maximum of 15° angle with the vertical plane. (see picture below).

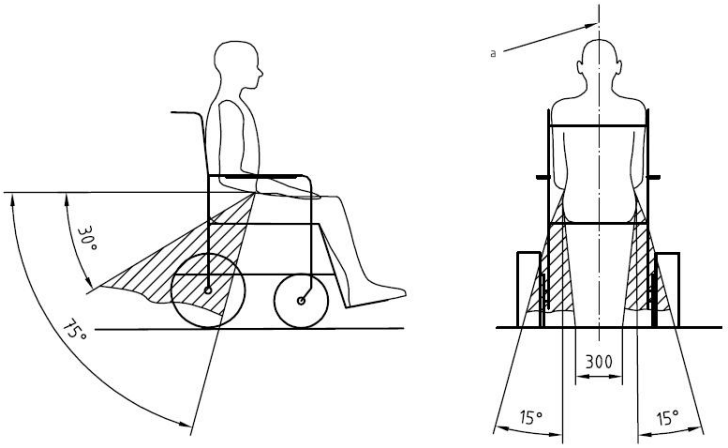

Optimal angles for a safety belt used by the wheelchair user

The shoulder part (1) of the safety belt should be positioned according to the figure below.

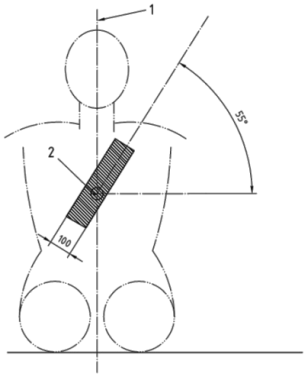

Shoulder safety belt positioning

NOTE

Please obtain the following points for an optimal personal safety of the wheelchair user:

- the pelvic belt should be worn low across the front of the pelvis, so that the angle of the pelvic belt is within the preferred zone of 30° to 75° to the horizontal, as shown in figure above.

- a steeper (greater) angle within the preferred zone is desirable.

- belt restraints should not be held away from the body by wheelchair components or parts, such as the wheelchair armrests or wheels, along with an illustration similar to that of the figure shown above.

- upper torso belts should fit over the shoulder and across the chest, as illustrated in figure of the shoulder safety belt positioning.

- belt restraints should be adjusted as tightly as possible, consistent with user comfort.

- belt webbing should not be twisted when in use.

Picture of improper belt fit

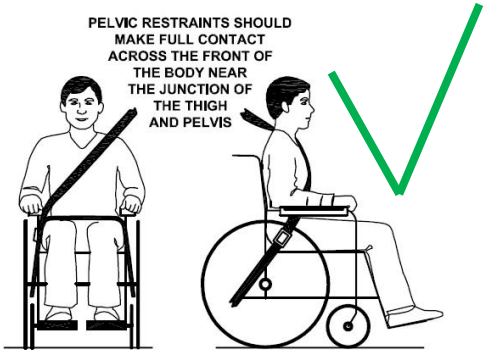

Picture of proper belt fit

NOTE

Please, make sure the following conditions are fulfilled to obtain a safe transportation:

- Whenever possible the occupied wheelchair shall be located in a forward-facing configuration and secured by the tie downs in accordance with the WTORS (wheelchair tie down and occupant-restraint system) manufacturer's instructions.

- This wheelchair is suitable for use in vehicles and has met the performance requirements for travelling forwards-facing in frontal impact conditions. Its use in other configurations within a vehicle has not been tested.

- The wheelchair has been dynamically tested in a forward-facing orientation with the ATD (anthropomorphic test device) restrained by both pelvic and upper torso belts.

- Both pelvic and upper torso belts should be used to reduce the possibility of head and chest impacts with vehicle components.

- When possible, other auxiliary wheelchair equipment should be either secured to the wheelchair or removed from the wheelchair and secured in the vehicle during transit, so that it does not break free and cause injury to vehicle occupants in the event of a collision.

- Positioning supports should not be relied on for occupant restraint in a moving vehicle unless they are labeled as being in accordance with the requirements specified in ISO 7176/19-2008.

- The wheelchair should be inspected by a manufacturer's representative before reuse following involvement in any type of vehicle impact.

NOTE

- Alterations or substitutions should not be made to the wheelchair securement points or to structural and frame parts or components without consulting the manufacturer.

- Only use "gelled electrolyte" batteries on powered wheelchairs when used in a car.

19.2 Transportation using Dahl Docking station

EVO Lectus has also been crash tested using a Dahl docking station tie down system according to 7176-19:2008 and 10542-1:2012 SWM, where the wheelchair is facing forward in driving direction (driving direction like the driver seat)

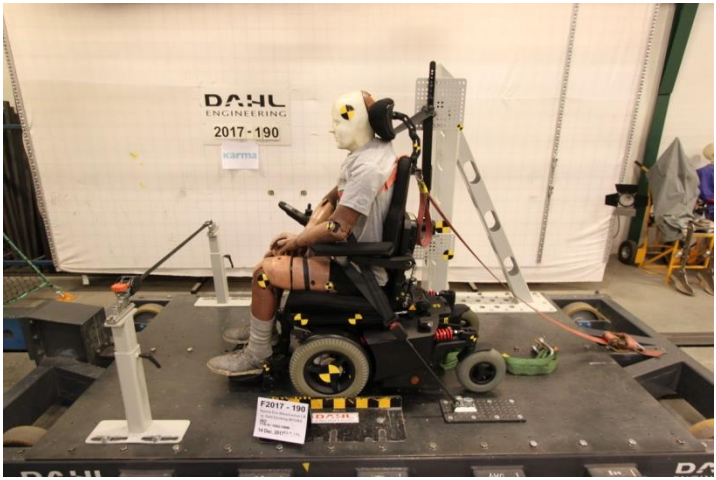

EVO Lectus crash test using Dahl Docking station.

The locking of the wheelchair into the Dahl Docking station make it much easier to lock down the wheelchair for occupied transportation. It can be used also for wheelchair users who want to drive the car by themselves.
The system is self-locking and can be release by pushing a button. The locking device will open for a certain time to make the docking possible.

WARNING

The Dahl Docking station is only allowed to build in to a vehicle by trained and authorized staff of a registered car adaptation company. For ordering the Dahl Docking and its accessories, please contact Dahl Engineering in Denmark for further details. You can find Dahl at www.dahlengineering.dk

19.2.1 Mounting of the Dahl locking adapter on the wheelchair

The EVO chassis can be equipped with a Dahl docking plate underneath the battery box frame of the chassis.

EVO chassis with Dahl Docking plate mounted.

For detailed information about the Dahl Docking system, please visit the homepage: www.dahlengineering.dk
To fit the Dahl docking plate, Dahl has created a special kit for EVO chassis which included the special Dahl nut plates and the spacers for the battery box of EVO to level the batteries. This kit is available under Dahl part no: 503194

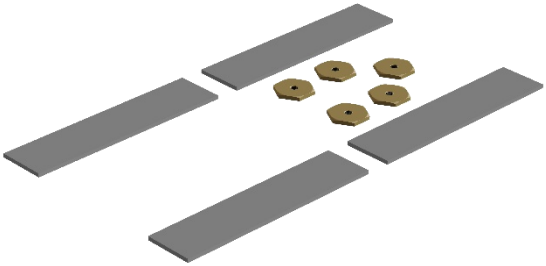

503194 EVO/ Dahl mounting nut and spacers

⚠ WARNING

The Dahl Docking station is only allowed to build in to a vehicle by trained and authorized staff of a registered car adaptation company. For ordering the Dahl Docking and its accessories, please contact Dahl Engineering in Denmark for further details. You can find Dahl at www.dahlengineering.dk

The EVO chassis has dedicated holes in the chassis where the Dahl Docking plate can be mounted on.

Dedicated holes for mounting Dahl Docking plate

1. Remove the batteries from the EVO Chassis and put the 5 special Dahl nut plates in to the dedicated mounting holes from the inside of the battery box.

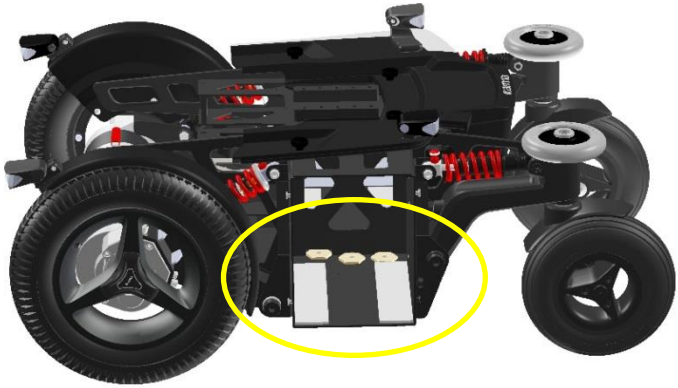

2. Two plastic spacers are to be placed in every battery box on the floor. Best is to fix them with some double sided tape.

3. Now take the Dahl spacer (Dahl part no: 500673, docking plate (Dahl part no: 500561 and 5 special Dahl high grade steel (14.9) Torx bolts (Dahl part no: 502800) to mount the Dahl docking plate on to the EVO chassis.

NOTE

The special Dahl high grade Torx bolts (Dahl part no: 502800) only come in one length which often is too long. They need to be cut into the right light by the authorized engineer to fit the locking plate properly without damaging the batteries.

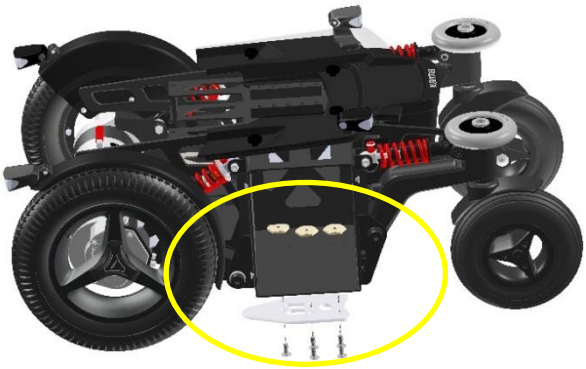

Mounting the Dahl docking plate on to the EVO chassis

4. After cutting the bolts to the right length, Loctite 222 needs to be added on to the thread to secure the bolts.

5. The five Torx bolts shall be tightened with a torque wrench to the preset torque of 20-24 Nm.

6. Place the batteries back into the chassis and connect them to the electronics.

Now the EVO chassis is ready to be docked into the Dahl Docking station. The mounting of the Dahl docking station into your vehicle shall only be executed by an authorized car adaptation company. They will get the right support and information from Dahl Engineering how to mount the docking station in to the designated vehicle.

⚠ WARNING

The Dahl Docking station is only allowed to build in to a vehicle by trained and authorized staff of a registered car adaptation company. For ordering the Dahl Docking and its accessories, please contact Dahl Engineering in Denmark for further details. You can find Dahl at www.dahlengineering.dk

Dahl Docking station

Dahl docking station mounted on the floor

Docking station and docking plate on chassis

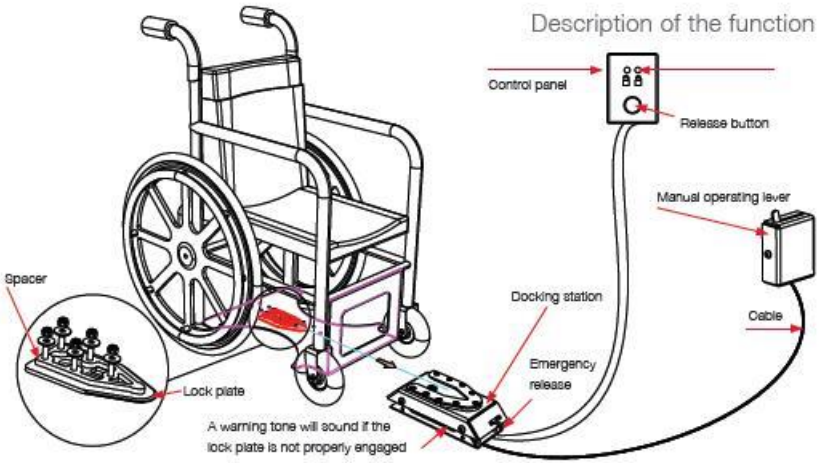

19.2.2 Locking procedure:

First, lift up the support wheels of the EvO Altus. This is in order to avoid a collision with the ramp. Now drive the wheelchair slowly into the vehicle and make sure you center your wheelchair in the middle of the docking module. If well positioned the locking system will also guide the wheelchair into the docking station. Keep in slowly driving until you feel the wheelchair is hitting the end position in the docking station. At the same time, you will hear a clicking sound. The wheelchair is now locked in to the docking station. The light on the control panel will light up de LED showing the wheelchair is locked in correctly. Now switch the wheelchair off.

⚠ WARNING

If the wheelchair is not centered correctly, it might not be possible to lock in top the docking station. In that case, retry by driving a bit backwards and re-center the wheelchair. Try once more until you hear the clicking sound and you see the locked sign LED on.

After the wheelchair is locked in, put the car safety belt on according to the instructions

⚠ WARNING

Do not forget to put the car safety belts on before driving in the vehicle. This is in order to avoid dangerous situations and personal or wheelchair damage.

19.2.3 Unlocking procedure:

To unlock the wheelchair, first open up the car safety belt. Then switch on the wheelchair and switch to drive mode. Now push the release button of the Dahl Docking station. You will hear a firm click. The locking bolt is now retracted, and the wheelchair can drive in reverse direction out of the Docking station.

NOTE

After pushing the release button of the Dahl Docking station, the locking bolt is retracted for a certain period of time. After that time, the bolt will lift up again and lock the Docking station. Make sure you drive your wheelchair out of the Docking station in this time window of the unlocked position. If not, you have to push the release button one more time.

19.2.4 Manually unlocking in case of electric failure or accident:

The Dahl Docking station can be unlocked manually in case of an emergency or if the electric unlocking is failing.

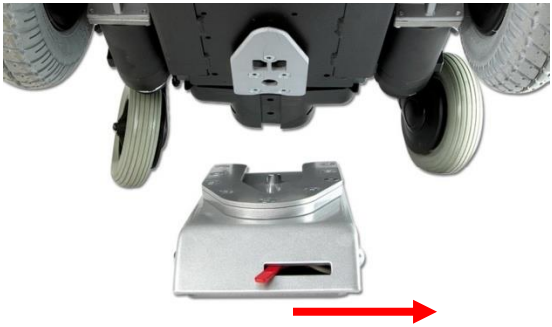

To unlock the docking station manually, the red lever needs to pull to the right. This retracts the locking bolt manually so the wheelchair can be released out of the docking station.

WARNING

In case of a failure of the docking station, contact your local car adaptation company who has built in the device into your vehicle. Only authorized and trained staff is allowed to work on the docking device.

19.2.5 Safety belt

If the user is transported in his wheelchair, it is necessary to use a car safety belt to secure the wheelchair user.

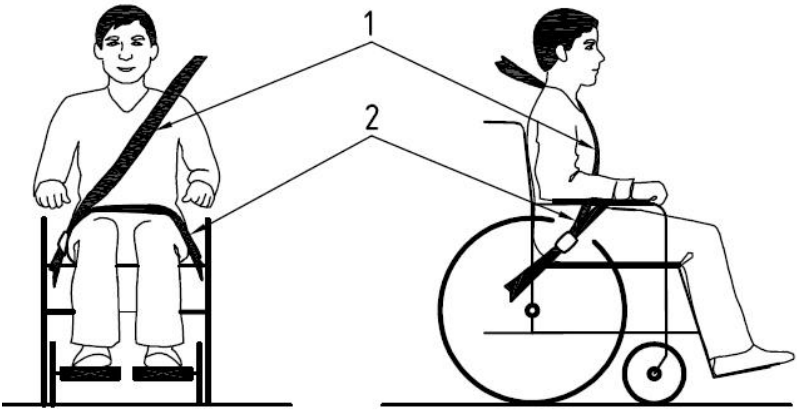

Positioning of the car safety belts for wheelchair users.

The wheelchair has been crash tested using a Dahl 3-point occupant safety belt, model 500984. We advise you to use a similar system or a system that is equally specified. It is very important to use the safety belt in the right angles according to the wheelchair user. The angle for the pelvis part (2) of the safety belt must be in angle of 30- 75 ° with the horizontal plane. (see picture below). Also, the side angle should stay between the vertical planes to maximum of 15° angle with the vertical plane. (see picture below).

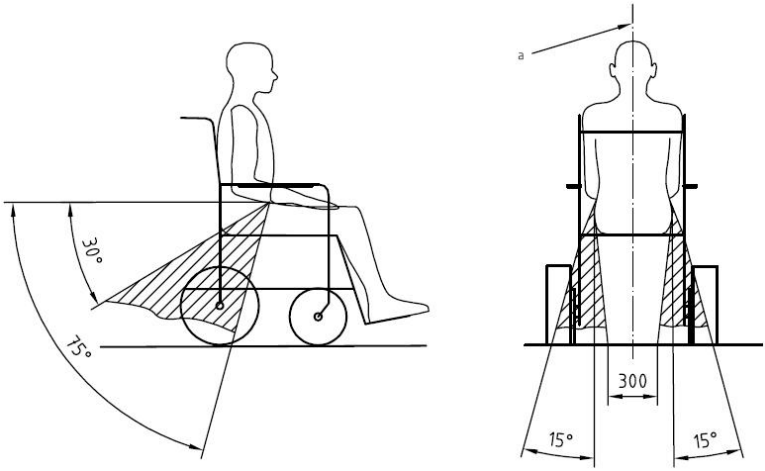

Optimal angles for a safety belt used by the wheelchair user

The shoulder part (1) of the safety belt should be positioned according to the figure below.

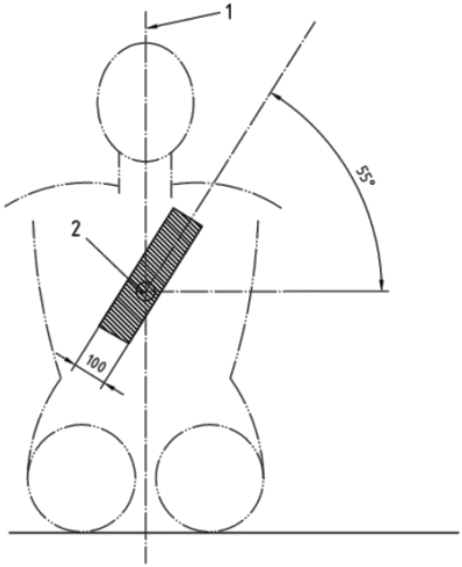

Shoulder safety belt positioning

NOTE

Please obtain the following points for an optimal personal safety of the wheelchair user:

- the pelvic belt should be worn low across the front of the pelvis, so that the angle of the pelvic belt is within the preferred zone of 30° to 75° to the horizontal, as shown in figure above.

- a steeper (greater) angle within the preferred zone is desirable.

- belt restraints should not be held away from the body by wheelchair components or parts, such as the wheelchair armrests or wheels, along with an illustration similar to that of the figure shown above.

- upper torso belts should fit over the shoulder and across the chest, as illustrated in figure of the shoulder safety belt positioning.

- belt restraints should be adjusted as tightly as possible, consistent with user comfort.

- belt webbing should not be twisted when in use.

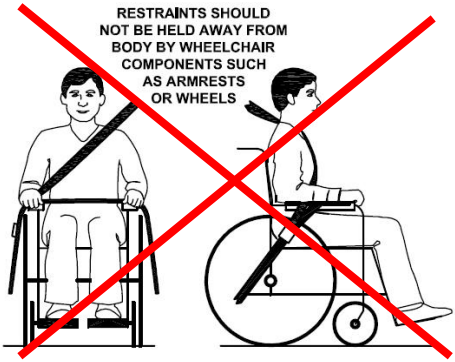

Picture of improper belt fit

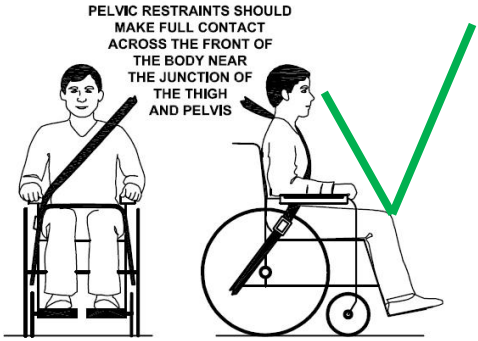

Picture of proper belt fit

NOTE

Please, make sure the following conditions are fulfilled to obtain a safe transportation:

- Whenever possible the occupied wheelchair shall be located in a forward-facing configuration and secured by the tie downs in accordance with the WTORS (wheelchair tie down and occupant-restraint system) manufacturer's instructions.

- This wheelchair is suitable for use in vehicles and has met the performance requirements for travelling forwards-facing in frontal impact conditions. Its use in other configurations within a vehicle has not been tested.

- The wheelchair has been dynamically tested in a forward-facing orientation with the ATD (anthropomorphic test device) restrained by both pelvic and upper torso belts.

- Both pelvic and upper torso belts should be used to reduce the possibility of head and chest impacts with vehicle components.

- When possible, other auxiliary wheelchair equipment should be either secured to the wheelchair or removed from the wheelchair and secured in the vehicle during transit, so that it does not break free and cause injury to vehicle occupants in the event of a collision.

- Positioning supports should not be relied on for occupant restraint in a moving vehicle unless they are labeled as being in accordance with the requirements specified in ISO 7176/19-2008.

- The wheelchair should be inspected by a manufacturer's representative before reuse following involvement in any type of vehicle impact.

19.3 Transportation on an airplane

When transporting your wheelchair by air, you should primarily pay attention to the following three things:

19.3.1. Batteries

Gel batteries: In most cases, they do not need to be removed from the wheelchair. The batteries only need to be disconnected from the wheelchair. To do this simply unplug the main fuse in the rear of the chassis.

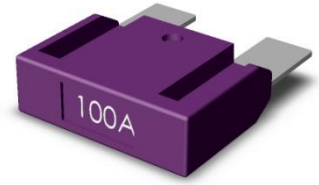

Position of the main fuse *The main fuse*

Acid batteries: Most airlines require that batteries be removed from the wheelchair and transported in special boxes that the airline may provide.

When transported by air, the wheelchair will be put with other goods in a confined space. Therefore, it is important to take preventive action to minimize transport damage to the wheelchair. Cover the control panel with soft, shock-absorbing material (foam plastic or similar) and fold it in towards the back rest. Protect other protruding objects in a similar manner. Tape any loose cables to the seat or covers.

19.3.2. The wheelchair's dimensions and weight

How much the wheelchair weighs and how large it is are important, depending on the type of airplane in which the wheelchair is to be transported. The smaller the airplane is, the smaller the wheelchair may be/weigh and vice versa. Always check with the airline what rules apply.

20 Maintenance and repairs

The user and attendant have to take care of some maintenance, service and occasionally fault-finding activities. Other activities as described in this paragraph should be carried out under supervision of your authorized dealer.

20.1 Battery charging

This wheelchair is provided with two maintenance free batteries. During normal use, the batteries must be charged every day. It is most convenient to make it a daily practice to charge the wheelchair during the night.

NOTE

- Only charge in a well ventilated room with no sources of open fire.
- Turn of the control unit before charging
- Make sure the charging cable is not causing crashes of people
- When the charger is disconnected from the wheelchair, also disconnect the charger from the mains.
- Place the charger in a place where it can radiate its heat freely during charging

After having taken care of these precautions, charge the batteries by plugging in the charger in the rear of the control unit first. Plug in the charger in the mains secondly. Read the manual of your charger carefully for any other precautions and user prescriptions. When the wheelchair is not used over a longer period, recharge the batteries every four weeks to keep the batteries in good condition. If the batteries are not charged regularly, the remaining capacity will quickly drop.

20.2 Short term storage

For the charging process to produce a battery with good capacity, the temperature in the storage room should not be lower than +5 degrees.
If it is stored at a temperature below +5 degrees, there is a higher risk that the battery has not been fully charged when it comes to be used and also a higher risk of corrosion.

20.3 Long term storage

The battery may be stored in an unheated room but it should be charged at least once a month for maintenance purposes.

NOTE

When the wheelchair is to be stored for a long term, we advise you to disconnect the batteries from the wheelchair. This way the batteries will hold their energy for a longer period.

When re-using the wheelchair, the batteries will be installed and fully charged.

Ask your local authorized supplier to store and maintain the batteries if they are not used for a long period. (More than two months)

NOTE

• Please note that a battery discharges itself and that a discharged battery can burst when it is cold. If the wheelchair is to be stored unused for an extended period of time, the batteries must always be charged once a month to avoid them being damaged.

• The wheelchair must not be stored in areas subject to condensation (steam or moisture on surfaces), for example utility rooms or similar.

• The wheelchair may be stored in an unheated room. From the point of view of corrosion, it is best for the room to be a few degrees warmer than the surroundings as this keeps the room drier.

• If the wheelchair is fitted with acid batteries, the acid level should be checked regularly. If the wheelchair is fitted with gel batteries, the liquid level does not need to be checked.

• The life of the batteries depends entirely on regular charging.

WARNING

Be careful when using metal objects close to the batteries. A short circuit might easily create strong sparks and can cause a fire. Should you need to work on the batteries, use isolated tools and wear protective gear on hands and eyes.

20.4 Tools

The wheelchair comes with a tool kit to be able to adjust most settings.

The toolkit includes:

- a set of Allan keys
- a flat Phillips screw driver
- a socket wrench 11 and 13 mm.

NOTE

Some repairs may require tools other than those supplied with the wheelchair.

WARNING

The main fuse must always be removed when batteries and are replaced. Always switch off the power supply to the control panel before interrupting the power with the main fuse.

NOTE

Any unauthorized alterations to the wheelchair and its systems may lead to an increased risk of accident.
All alterations to and interventions in the wheelchair's vital systems must be performed by an authorized service engineer. In case of doubt, always contact an authorized service engineer.

WARNING

Damage caused by self-servicing or servicing by unauthorized personnel cannot be claimed under warranty!

If you have any doubt in the capability of yourself or the service engineer, please contact your local authorized supplier to help you.

20.5 Wheels and tires

Check at regular intervals that the wheelchair's tires have the correct tire pressure.

Check regularly that the tire pressure is okay. We suggest to check the tire pressure at least every 4 weeks.

type of tire	tire size	recomm. pressure	max. pressure
front tire	3.00-8	43.5 PSI, 3 Bar, 300 Kpa	50.7 PSI, 3.5 Bar, 350 Kpa
rear tire	2.80-2.50-4	29.0 PSI, 2 Bar, 200 Kpa	36.2 PSI, 2.5 Bar, 250 Kpa

⚠ WARNING

An incorrect tire pressure may result in lower stability and maneuverability. Too low tire pressure also results in abnormal wear and shorter driving range.

20.5.1 Puncture repair

Since the wheelchair is rather heavy, it is recommended to let your authorized supplier repair eventual tire punctures. First lift the wheelchair so that the punctured tire is free from the ground. Both front and rear wheel tires can be taken off by loosening the bolts which hold the wheels on to the wheelchair. The front wheels should be taken off from the motor hub by first taking away the cover plate (A) and then loosening the 3 bolts (B).

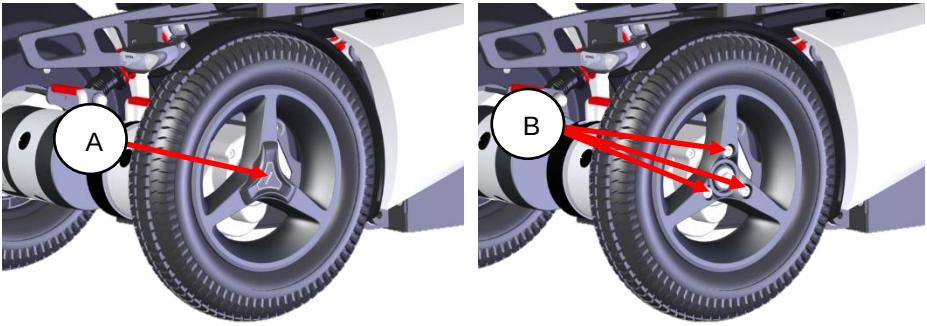

⚠ WARNING

Do not loosen the central hub bolt to remove the front wheel.

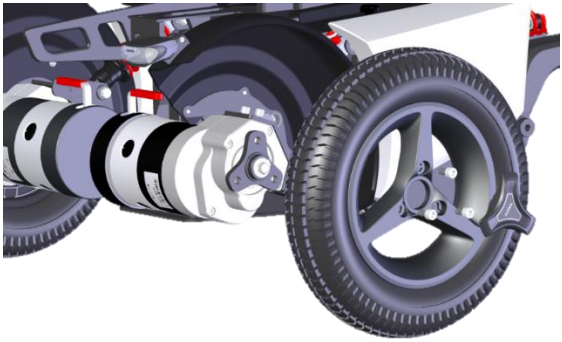

After taking the wheels of the wheelchair, the rim can be split. The tire is then available for repair. The inner tubes of the tires can be repaired according to the description on the tire puncture repair kit that you use. It is however recommended to renew the inner tube at all time when the tube has a puncture.

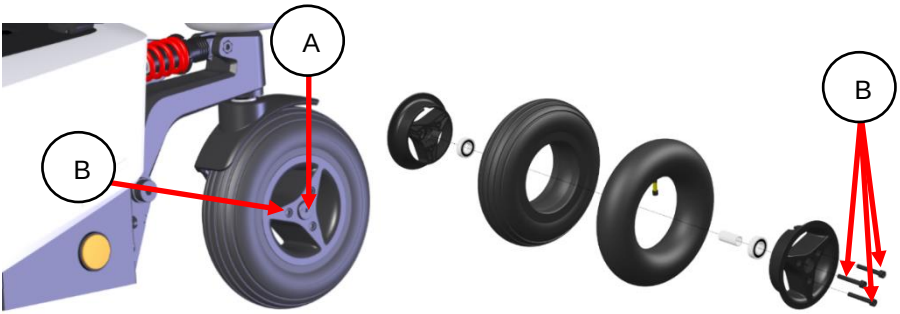

The rear wheels should be taken off from the axle by loosening the center bolt (A). The tire can be taken off by loosening the 3 bolts (B) and splitting the rim.

20.6 Cleaning

Regular care and maintenance will prevent unnecessary wear and damage to your wheelchair. The following is general advice recommended by Karma.
For severe soiling of the upholstery or damage to the surface finish, contact Karma or your local authorized supplier for information.

20.6.1 Upholstery, cloth / 3d mesh

For normal cleaning, wash the upholstery with hand warm water and a mild nonabrasive soap. Use a soft cloth or brush. Before the surface dries, wipe off any water/soap residues with a clean, dry cloth. This procedure may be repeated to remove stubborn dirt or stains.
If necessary, the cover may be removed before cleaning. See also the washing instructions on the label of the upholstery materials.

20.6.2 Metal surfaces

For normal cleaning it is best to use a soft cloth/sponge, hand warm water and a mild detergent. Wipe down carefully with a cloth and water, and dry off.
Remove scuff marks from semi-matt surfaces with soft wax (follow manufacturer's instructions).
Remove scuff marks and scratches from shiny surfaces using car polish, either liquid or paste. After polishing, apply soft car wax to restore the original surface gloss.

20.6.3 Plastic covers

For normal cleaning, wash plastic surfaces with a soft cloth, mild detergent and hand warm water. Rinse thoroughly and dry with a soft cloth. Do not use solvents or abrasive kitchen cleaners.

⚠ WARNING

Never use aggressive chemical cleaner or cleaning fluids. These will damage the surface and structure of the material.

⚠ WARNING

Never use a sponge with a hard surface. This will damage the surface and structure of the material.

⚠ WARNING

Never use a high pressure water hose or steam cleaner. This will damage the surface and structure of the material and could cause electronic failure.

20.7 Brake release, freewheel mode

Check regularly, approximately once a month, that the brake release and the brake release lever are working properly.
When the brakes are released, it should not be possible to drive the wheelchair.

Testing the brake release

20.8 Battery replacement

step 1: Place the wheelchair on a level surface and, if possible, raise the seat lift for better access.

step 2. Switch off the power supply using the ON/OFF key on the control panel and remove the main fuse at the rear of the chassis.

step 3. Undo the knob holding the battery cover locked.

step 4. Lift up the cover until you reach the end stop.

step 5. Pull the cover horizontally away from the chassis.

step 6. Pull the batteries almost out and disconnect the battery connections.

step 7. Replace the batteries

step 8. Reconnect the batteries according to the schematic which is place on the inside of the battery covers.

step 9. Place the batteries inside the battery box. Make sure the cables are not jammed between the battery and the chassis!

step 10. Put the battery covers back in to place.

step 11. Secure the battery covers with the hand screw.

⚠ WARNING

If you are not capable of replacing the batteries by yourself or you don't feel comfortable doing it, please contact you r local authorized supplier for help.

⚠ WARNING

Damage on the wheelchair as a result of a not proper repair or replacement is not covered by our product warranty.

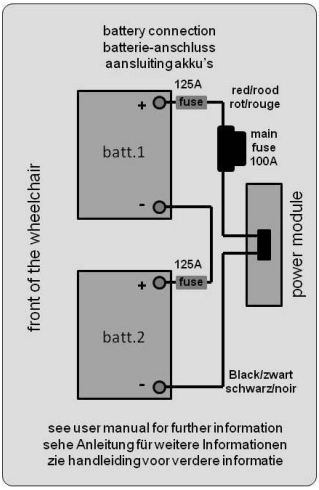

Battery connection sticker

⚠ WARNING

Damage on the wheelchair as a result of improper repair or replacement is not covered by our product warranty.

⚠ WARNING

Batteries are classified as chemical waste and need to be disposed according to the local regulations for chemical waste.

20.9 Replacing the main fuse

To replace the main fuse follow the next steps:

step1. Go to the rear end cover of the chassis
step 2. Pull off the rubber cover of the fuse holder.
step 3. Pull out the main fuse.
step 4. Place the new fuse into the holder and press it tight.
step 5. Place the rubber cover on to the fuse holder.

Place of the main fuse

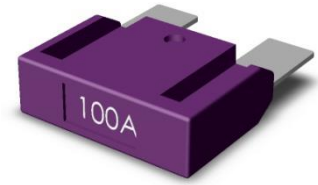

Main fuse

⚠ WARNING

Only use original and official spare part fuse from Karma. Other fuses might cause errors again or even fire.

⚠ WARNING

Wear protective gear when replacing the fuse, like safety goggles and hand gloves.

⚠ WARNING

If you are not capable of replacing the batteries by yourself or you don't feel comfortable doing it, please contact you r local authorized supplier for help.

⚠ WARNING

Damage on the wheelchair as a result of a not proper repair or replacement is not covered by our product warranty.

21 Refurbishment and re-use of the product.

This wheelchair is suitable for refurbishment and re-use. This means that, if the wheelchair is not used anymore by the first user, it can be refurbished to fit another user. Should you not be able to use the wheelchair any longer, we strongly recommend you to contact your local authorized supplier to have it picked up for refurbishment and re-use.

⚠ WARNING

The refurbishment of the wheelchair is only allowed to be executed by an authorized supplier.

⚠ WARNING

If the wheelchair is refurbished by a non-authorized supplier or institute, Karma Medical cannot be held responsible for this product, and all warranty claims will be voided.

ⓘ NOTE

The wheelchair will be refurbished according to a refurbishment guideline of Karma. This includes the replacement of all upholstery parts, a total disinfection of the product and a complete technical check of the wheelchair and its accessories.

22 Disposal of the product

In the case of disposal of the used wheelchair you need to follow the local legal regulations for disposals.

We strongly recommend you to contact your local authorized supplier to take care of the disposal of your wheelchair.

⚠ WARNING

Batteries are classified as chemical waste and need to be disposed according to the local regulations for chemical waste.

23 Trouble shooting

The following troubleshooting guide describes a number of faults and events which may occur when you use your wheelchair, together with suggested remedies. Note that this guide cannot describe all the problems and events which may occur and you should always contact your local authorized supplier or Karma in case of doubt.

event	possible cause	remedy
the wheelchair does not start up	Batteries discharged.	charge the batteries
	The cable connection of the control panel has come loose	reconnect the cable
	main fuse is defect	replace main fuse CHECK FIRST!!! see page 122
wheelchair doesn't drive	charge still connected	disconnect charger
	brake release activated	de-activate brake release
	wheelchair locked	unlock the wheelchair
the wheelchair switches itself on after a certain while	the energy saving mode has been activated	restart wheelchair using the on/off button
the wheelchair stops whist being driven	a cable connection of the R-net system has come loose	check all R-net connections and restart
	main fuse has triggered	replace main fuse CHECK FIRST!!! see page 122
the wheelchair only drive at reduced speed	a speed reducing inhibit is activated	move the seat into a position where max. speed is allowed.
	Gyro has been disconnected	re-connect gyro NEED SERVICE!!
certain powered seat function is not displayed in menu	cable connection of seat function in disconnected	call for service
	seat function motor defect	call for service
wheelchair cannot be charged	main fuse disconnected	re-install main fuse
	main fuse has triggered	replace main fuse CHECK FIRST!!! see page 122
	connection between charger and joystick module not good	check connection call for service

Note that this guide cannot describe all the problems and events which may occur, and you should always contact your local authorized supplier or Karma in case of doubt.

23.1 Diagnostics R-Net LCD

When an error or a fault occurs in the wheelchair's electronics, information on it is displayed in the control panel's display. This information can then be used to diagnose where the error/fault occurred and its cause.
Troubleshooting and repairs must always be performed by authorized personnel with good knowledge of the wheelchair's electronics.

Diagnostic screens

When the control system's integrated protection circuits have been triggered so that the control system can no longer operate the wheelchair, a diagnostic screen is displayed in the control panel's display.

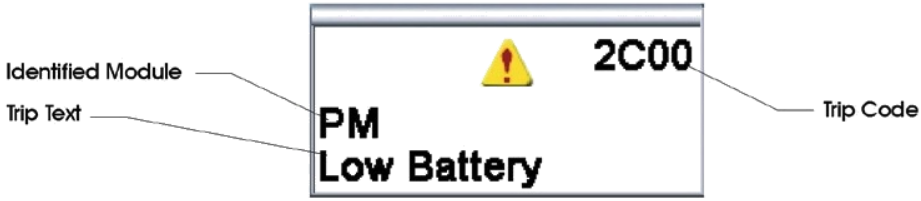

This indicates a system fault, i.e. R-net has detected a problem somewhere in the wheelchair's electrical system.

NOTE

If the fault is in a module that is not currently being used, it may still be possible to drive the wheelchair, but the diagnostic screen is displayed occasionally.

Switch off the wheelchair and leave it off for a few minutes. Then restart the wheelchair. If the fault persists, you must switch off the wheelchair and contact your service contact. Write down the information displayed in plain text in the control panel's display and pass it on to your local authorized supplier's service contact.

WARNING

Diagnostics should only be performed by authorized persons with sound knowledge of the wheelchair's electronic control system. Incorrect or poorly performed repair works may make it dangerous to use the wheelchair. Karma accepts no liability for any personal injury or damage to the wheelchair and its surroundings that occurs on account of incorrect or poorly performed repair work.

24 Technical specifications

Transportation size

DATA				
General				
product name			EvO Lectus	
wheelchair class			Class B	
expected service life			5 years	
Sizes			min.	max.
length, mm			1200	
width, mm			610	660
height, mm			1115	
weight, kg			165	
horizontal location of axle, mm			345	
Smallest size for transportation				
length			880 mm	
width			610 mm	
height			770 mm	
mass of the heaviest part			120 kg	
Wheels				
size front			3.00 - 8	
size rear			2.80-2.50 - 4	
tire pressure	front		43.5 PSI, 3 Bar, 300 Kpa	
	rear		29.0 PSI, 2 Bar, 200 Kpa	
Performance			min.	max.
speed, km/h			6 (Germany)	10/12.5
drive range, km	(depending on size of batteries)		25	45
minimum turning area (minimum) mm			1000	
minimum turning radius, mm			750	
obstacle climb, mm				70
static stability	downhill		9	
	uphill		9	
	sideways		9	
dynamic stability	uphill		10°	
	downhill		10°	
	sideways		10°	
breaking distance from max. speed, in mm			2000	2400
Seat				
effective seat depth, mm			400	600
effective seat width, mm			420	520
seat angle, in degrees			0	50
seat surface height (seat pan to ground)			450	850
maximum user weight, kg				136
backrest angle, in degrees			85	180
backrest height, mm			510	670
foot rest to seat distance, mm			400	600
legrest to seat angle, in degrees			85	180
armrest height			70	300
front location of armrest structure			open structure	
Electronics			PG drives Technology	
voltage			24 volt	
power			PM120	
joystick module			CJSM	
Batteries				
type	rechargeable, maintenance free	Gel	MPA 70-12, 70A	
	rechargeable, maintenance free	Gel	MPA 85-12, 85A	
charging time	(depending on size of batteries)		8-10 hours	
Fuse				
main fuse			100A	

The wheelchair conforms to the following standards:

a) requirements and test methods for static, impact and fatigue strengths (ISO 7176-8

b) power and control systems for electric wheelchairs – requirements / test methods (ISO 7176-14)

c) climatic test accordance with ISO 7176-9

d) requirements for resistance to ignition in accordance with ISO 7176-16

25 Accessories

Accessories for Karma power wheelchairs are subject to continuous development. Every day we design new accessories to improve the flexibility of our products.
Contact your local authorized Karma supplier for more information on the accessories which are available for your wheelchair.

Should you have a good suggestion for a new accessory, do not hesitate to contact us. Your idea might be the next new accessory!

Worldwide

Karma Medical
NO.2363, Sec. 2
University Road
Min-Hsiung Shiang
Chia-Yi 621, Taiwan
www.karma.com.tw
globalsales@karma.com.tw

Europe

Karma Mobility S.L.
C/ Periodista Francisco Carantoña Dubert, 23 Bajo 33209 Gijón - Asturias (Spain)

phone: +34 984 390 907
karma@karmamobility.es

NOTES:

We have a big dream

Whether it's a customized wheelchair, standing chair,

general purpose chair, or another mobility aid device,

each of our products is carefully designed with

our customers' voices, needs, and desires in mind.

When it comes to user experiences, we strive to be

more “caring,”“empathetic,” and “approachable.”

Through our dedication and our mindfulness, we look forward to

bringing more confidence, joy, and love for life to those with physical abilities around the world.

we look forward to bringing more confidence, joy, and love for life to those with physical abilities around the world.

Karma Medical is continuously improving their products and accessories.
Changes might take place without further notice.

karma

A Better Wheelchair, A Better Fit

KARMA MOBILITY S.L European Representative.
www.karmamobility.es
+34 984 390 907
karma@karmamobility.es

KARMA MEDICAL PRODUCTS CO., LTD.
www.KarmaMedical.com
+886 5 206 6688
globalsales@karma.com.tw

110400000549 Release Date: Jan. 2021 V.06